NAT'L INST. OF STAND & TECH
A11105 973915 S
Reference Publi-
cations

NBS TECHNICAL NOTE 1184

U.S. DEPARTMENT OF COMMERCE/National Bureau of Standards

Utility Programs for Producing Camera Ready Illustrations on a Microcomputer and a Laboratory Plotter

QC
100
.U5753
No.1184
1984

NATIONAL BUREAU OF STANDARDS

The National Bureau of Standards[1] was established by an act of Congress on March 3, 1901. The Bureau's overall goal is to strengthen and advance the Nation's science and technology and facilitate their effective application for public benefit. To this end, the Bureau conducts research and provides: (1) a basis for the Nation's physical measurement system, (2) scientific and technological services for industry and government, (3) a technical basis for equity in trade, and (4) technical services to promote public safety. The Bureau's technical work is performed by the National Measurement Laboratory, the National Engineering Laboratory, and the Institute for Computer Sciences and Technology.

THE NATIONAL MEASUREMENT LABORATORY provides the national system of physical and chemical and materials measurement; coordinates the system with measurement systems of other nations and furnishes essential services leading to accurate and uniform physical and chemical measurement throughout the Nation's scientific community, industry, and commerce; conducts materials research leading to improved methods of measurement, standards, and data on the properties of materials needed by industry, commerce, educational institutions, and Government; provides advisory and research services to other Government agencies; develops, produces, and distributes Standard Reference Materials; and provides calibration services. The Laboratory consists of the following centers:

Absolute Physical Quantities[2] — Radiation Research — Chemical Physics — Analytical Chemistry — Materials Science

THE NATIONAL ENGINEERING LABORATORY provides technology and technical services to the public and private sectors to address national needs and to solve national problems; conducts research in engineering and applied science in support of these efforts; builds and maintains competence in the necessary disciplines required to carry out this research and technical service; develops engineering data and measurement capabilities; provides engineering measurement traceability services; develops test methods and proposes engineering standards and code changes; develops and proposes new engineering practices; and develops and improves mechanisms to transfer results of its research to the ultimate user. The Laboratory consists of the following centers:

Applied Mathematics — Electronics and Electrical Engineering[2] — Manufacturing Engineering — Building Technology — Fire Research — Chemical Engineering[2]

THE INSTITUTE FOR COMPUTER SCIENCES AND TECHNOLOGY conducts research and provides scientific and technical services to aid Federal agencies in the selection, acquisition, application, and use of computer technology to improve effectiveness and economy in Government operations in accordance with Public Law 89-306 (40 U.S.C. 759), relevant Executive Orders, and other directives; carries out this mission by managing the Federal Information Processing Standards Program, developing Federal ADP standards guidelines, and managing Federal participation in ADP voluntary standardization activities; provides scientific and technological advisory services and assistance to Federal agencies; and provides the technical foundation for computer-related policies of the Federal Government. The Institute consists of the following centers:

Programming Science and Technology — Computer Systems Engineering.

[1]Headquarters and Laboratories at Gaithersburg, MD, unless otherwise noted; mailing address Washington, DC 20234.
[2]Some divisions within the center are located at Boulder, CO 80303.

NATIONAL BUREAU
OF STANDARDS
LIBRARY

Ref
QC
100
.U5753
No. 1184
1984

Utility Programs for Producing Camera Ready Illustrations on a Microcomputer and a Laboratory Plotter

C. E. Dick

Center for Radiation Research
National Measurement Laboratory
National Bureau of Standards
Washington, DC 20234

U.S. DEPARTMENT OF COMMERCE, Malcolm Baldrige, Secretary
NATIONAL BUREAU OF STANDARDS, Ernest Ambler, Director

Issued January 1984

National Bureau of Standards Technical Note 1184
Natl. Bur. Stand. (U.S.), Tech. Note 1184, 59 pages (Jan. 1984)
CODEN: NBTNAE

U.S. GOVERNMENT PRINTING OFFICE
WASHINGTON: 1984

For sale by the Superintendent of Documents, U.S. Government Printing Office, Washington, DC 20402

TABLE OF CONTENTS

Abstract 1
Introduction 2
Hardware 3
Software 3
Plotter Geometry and Variables 5
Running Draftsman 6
Making a Drawing 8
Sample Illustrations 9
Conclusion 12
Appendix A 13
References 16
Table 1: Main DRAFTSMAN Program Segments 17
Table 2: Instruction Files 18
Table 3: DRAFTSMAN/BPLOT Correspondence 20
Figure Captions 21
Listings 29

Utility Programs for Producing Camera Ready Illustrations on A Microcomputer and a Laboratory Plotter

C. E. Dick
National Bureau of Standards
Washington, DC 20234

ABSTRACT

A collection of software routines is described that allows the user to prepare camera ready illustrations in the laboratory or office environment. These routines are written in APPLESOFT BASIC and 6502 assembly code for the Apple II microcomputer which is interfaced with an inexpensive digital plotter. Provisions are made to draw figures composed of straight and curved line segments, letter the figures with a variety of graphic arts fonts, and save the figures on disk for later plotting or revision.

Key words: Apple II computer; camera ready illustrations; digital plotter; graphic arts; microcomputer.

INTRODUCTION

In the last few years, microcomputers capable of controlling inexpensive laboratory plotters have made possible the production of camera ready illustrations in the laboratory and office environment. Such a system has several inherent advantages; it provides the author with rapidly generated illustrations at low cost; it permits updating of drawings and figures as conditions warrant; and it eliminates costly and time consuming drafting and hand lettering by graphics artists.

The ingredients of such an in-house facility, in addition to the microcomputer and plotter are:

a) a collection of mechanical drafting routines, and
b) a repertory of graphic arts fonts in digitized form.

The second of these requirements, a repertory of graphic arts fonts, has been discussed in a previous report (1) which describes the storage and retrieval of the Hershey fonts (2,3) of occidental characters on the Apple II* computer system operating under DOS 3.3 (4). The first item, a collection of drafting routines, is the subject of this report which describes a program named DRAFTSMAN which is written in Applesoft Basic (5). This program provides the capability of producing illustrations complete with text on a digital plotter, editing them if necessary, and storing them on floppy disk for later recall. In addition, an assembly language program called BPLOT is provided to interface the Apple II to a Hiplot* (6) digital plotter. Although this program is designed to drive a Hiplot plotter, it can be modified if necessary to interface with other types of plotters. This collection of programs is designed to operate on an Apple II computer equipped with at least 48K of memory. The following sections describe the system in detail and include examples of the types of illustrations that can be produced using this system.

* In this report, certain commercial products are referenced by name. These references are for informational purposes only, and do not imply that these products are necessarily the best for the purpose and do not imply endorsement by NBS.

HARDWARE

As presently implemented in our laboratory, the system operates on an Apple II computer system which is interfaced with a Houston Instrument Hiplot plotter (Model DMP-2) through an Apple RS-232 serial interface (7) operating at 9600 baud. This plotter has a useable plotting area of 184 x 260 mm (7.25 x 10.25 in.) with resolution steps of 0.127 mm (0.005 in.) in both the horizontal and vertical directions. The movement of the pen is controlled by the series of ASCII characters p..w, which move the pen in the directions shown in Fig. 1, and the characters y,z which raise or lower the pen respectively. (Parenthetically, all figures in this report were drawn on this system.) For example, outputting the character string "zpppqrrry" to the plotter will lower the pen, advance the carriage 3 units up, 1 unit at an angle of $+45^{\circ}$, 3 units to the right, and finally, raise the pen. Although the interface program named BPLOT described in the Software Section was written to generate these specific ASCII characters for this plotter, this program was written as an assembly language routine not only for execution speed but so it could be modified to support other plotters if desired.

The Apple computer is a standard model Apple II or Apple II+ with at least 48 kbytes of RAM. The serial I/O interface card is installed in expansion slot 2 although any slot other than 0 could be used with an appropriate modification of the driver software of BPLOT. In addition, to facilitate the editing process, we have a printer interfaced to the computer in slot #1 although this is not necessary for the execution of the programs.

SOFTWARE

The software package consists of several parts as mentioned above. Listing 1 gives a catalog of the diskette containing this system. As can be seen from an examination of this listing, the primary routines for generating the illustrations are contained in an Applesoft basic program called DRAFTSMAN which is the greeting

program for the diskette. In addition, there are twenty two text files which contain the digitized Hershey fonts (1), the binary file BPLOT which contains the output driver, and five binary files labeled INSTR.1 to INSTR.5 which are used to supply instructions to users of the system but are normally not needed to execute the programs. These files occupy 263 sectors of the diskette leaving approximately 200 sectors available for storing illustrations produced using the system.

The Applesoft code of DRAFTSMAN is given in Listing 2. A Pascal extension of this program which includes routines to input data from peripheral devices, edit the data, and plot it is currently being debugged and documented (8). The variables used in DRAFTSMAN are documented in Listing 3 which was produced by the variable documentation program of Wagner (9). Reference to this listing will be helpful to understand the program structure of DRAFTSMAN.

As can be seen from an examination of the program, DRAFTSMAN is composed of a number of inter-related segments. The principal segments and their corresponding line numbers are given in Table 1. In addition, in Table 1, a name is listed for each segment of the program. Although these names are meant only for reference in the discussions that follow, some of them are used as procedure names in the forthcoming Pascal version (8).

In addition to the DRAFTSMAN program, the binary program BPLOT is needed to interface between DRAFTSMAN and the Hiplot plotter. An assembled listing of this program as compiled with the Microproducts assembler (10) is discussed in some detail in Appendix A. This program uses double precision values for the x- and y-coordinates to calculate the output string of ASCII characters which are stored in a character table beginning at memory location 34304 ($8600). A command to output this character string results in the sequential outputting of these characters using the ROM based software supplied as part of the Apple serial I/O card located in slot #2 (7). (A CALL to the location $C200

results in the outputting on the RS-232 line of whatever byte is contained in the Apple's 6502 microprocessor's accumulator.)

Finally, the remaining files are used to supply the appropriate Hershey fonts (1,2) to the program or to provide the user with directions on how to communicate with the program. The uses of these files will be more fully documented in the sections which describe the execution of the program.

PLOTTER GEOMETRY AND VARIABLES

In order to understand the operation of the DRAFTSMAN program it is neccessary to be familiar with the coordinates of the plotter system. Figure 2 illustrates these coordinates and some of the variables used in the software programs. The origin of the coordinate system is in the lower left hand corner (0,0) and the x- and y-axis form an orthogonal coordinate system in the usual sense. Since the plotter has a resolution of 200 steps per inch, the variables XD and YD are used to record the current pen position from the origin. Thus in Fig. 2, for example, the point (3,2) which is 3 inches from the origin in the x-direction and 2 inches in the y-direction, has an XD value of 600 (3x200) and a YD value of 400 (2x200). For convenience in returning the pen to known locations in the plot, the program allows for the definition of any point as a reference origin. These reference points may be stacked up to 9 levels deep and the variable R keeps track of this stacking. The arrays H(R) and V(R) are used to store the offset of the last defined reference location from the one preceding it. Thus in Fig.2, if the point (3,2) is defined as the current origin, the value of R is incremented (R=1) and the offsets to the previous origin (0,0: R=0) are stored as H(0)=600 and V(0)=400. If the pen is subsequently moved to a new location, (6,3), the variables XD and YD contain the plotter offset to the last defined origin as shown on the figure. The variables LX and LY are used to store the total offset of the current pen location from the lower left corner of the plot, (0,0), and are used to keep the pen from overflowing the plotter limits. Since the useful plotting

area of this particular plotter is 10.25 in. horizontally by 7.25 in. vertically, the program ensures that the values of LX and LY are in the ranges from 0-2050 and 0-1450 respectively. Finally, for convenience, the program also recognizes the directions L,R,U, and D as shown in Fig.2.

RUNNING DRAFTSMAN

The DRAFTSMAN program is executed with the usual Applesoft RUN command or by booting the system with the diskette in the boot disk drive. After the presentation of the logo, the user is asked whether directions are needed. If the directions are requested, the program sequentially loads the binary files INSTR.1 to INSTR.5 into the portion of memory reserved for the first page of text ($0400-$07FF) where they are automatically displayed by the monitor. Table 2 gives a listing of the instructions that are displayed during this process. As can be seen from this table, the program is designed to recognize mnemonic commands issued by the user to move the pen on the plotter or to perform certain disk or utility commands. These instructions will be covered in detail in the following section.

After the direction cycle is completed, the binary output driver is loaded by the program segment Bload and variables are assigned to allow the program to communicate with this I/O and vector generator routine. In addition, the user is requested to position the plotter carriage in the lower left corner (the location 0,0 of Fig.2). The program is designed so that all variables are initialized with this location as a starting point. Finally, the user is requested to input the drive number of the diskette which will be used to either store or retrieve drawings.

The Initialize section of the program completes the remaining variable initialization and inquires whether the drawing has been previously saved on the diskette. If the drawing is on diskette, the Load section of the program inputs the text file containing the instruction set describing that drawing and the values of the variables shown in Fig. 2 at the time the drawing was saved. At

the end of the load, the user has the option of specifying whether the drawing is a new print <N> or a continuation of an old print <C>. If the new print option is chosen, the previously saved drawing will be redrawn up to the point where it had been saved and control will be returned to the user. If the continuation option is chosen, the pen can be placed in the appropriate location and control is immediately returned to the user to append further instructions. If the drawing is not one that has previously been saved, control is immediately returned to the user for the creation of a new drawing.

The Input section of the DRAFTSMAN program is the section in which the user enters the actual instructions to be executed. These instructions are input as text strings into an array named B$(J) which has a maximum size of 475 elements. In the rare case where a drawing might take more than 475 instructions to specify, it can be broken down into two or more parts which can be sequentially plotted using the continuation option described above. Instructions are input in response to the prompt "INSTRUCTION NO. <J>" and are terminated by a carriage return. Upon termination of the input instruction, the instruction string is decoded and the appropriate flags are set to indicate the operation to be performed. These flags are decoded by the Decode section and branches are made to various subroutines (Fonts, Text, Circle, X-Y etc.) to calculate the values of the x and y offset coordinates and the pen position (up,down). These values are then passed to the Out section which calls the appropriate routines in BPLOT to calculate and output the appropriate ASCII text string to the plotter. After the current instruction is decoded and executed, the next instruction is requested and the process begins again.

The program is halted through the Exit routine which is called by the input instruction "Q" and which then gives the user the option to save the current drawing. The remaining sections are transparent to the user and are used to handle DOS errors

(Error), check for input syntax errors (Syntax), or to edit the instructions (Edit).

MAKING A DRAWING

As described above, instructions are input in the form of easy to remember mnemonics which are interpreted by the program to perform the desired functions. These mnemonics, listed in Table 2, can be divided into the following categories:

a) Instructions which change the pen position or move the carriage on the plotter. These instructions are those listed under the MULTIPLE COMMAND category of Table 2. In general, these commands may be combined to provide multiple instructions in one line. For example the command PD3.1CR is interpreted to move the carriage 3.1 centimeters to the right with the pen down (i.e. a 3.1 cm long line will be drawn on the paper.) The DIRECT MOVEMENT command X#Y# is also of this type and is listed in a separate category in the table for emphasis since it is frequently used. It should also be noted that the pen may also be moved at an angle for a given distance by the A## command when combined with a distance as in PU3IA45 which will move the carriage 3 inches at an angle of $+45^{\circ}$ to the positive x-axis with the pen up. Special instructions for the circle command, @, are listed in Table 2 and allow the drawing of circles, ellipses, and arcs of circles or ellipses. It is also not necessary to specify the scale factor, I or C, in each command as this factor will remain at its last specified value unless explicitly changed. The default value for this parameter is inches. In the same fashion the pen is also left in its last position when drawing lines unless explicitly changed. The pen default is "pen up", and the pen returns to this value at the completion of the arrow, circle, erase, and home commands.

b) Instructions which are used to perform specific actions and are listed in Table 2 under CONTROL COMMANDS. These commands are entered as listed in the Table except for the dotted line

command, *, which may be combined with an optional dot length and a command from the commands above. (For example, the instruction .05*IX2Y1 will draw a dotted line from the current carriage position to the point 3 inches to the right and 1 inch up with .05 inch long dots and spaces.) The font command is used to enter the Hershey fonts from the diskette and the text and size commands are used to enter text or compute the length of a text string. Table 2 has information on the use of these commands. Figure 3 illustrates the Hershey characters that are currently available to the program. Finally, the erase command, E, will remove the last instruction input from the command sequence and reverse the pen movements associated with the deletion. If this command was one which plotted a line with the pen down however, that line will still be on the paper and must be manually erased or the figure redrawn.

c) Finally, there are the utility commands, ?, V, and Q. The ? command results in the display of the instruction files INSTR.1 through INSTR.5 on the monitor. The verify command, V, allows the user to print out all the instructions entered prior to its execution on either the monitor or a printer and edit them for errors if necessary. Finally, the quit command, Q, terminates the input phase and allows for the saving on diskette of the instruction set for the drawing. None of these commands is saved as a permanent part of the instruction array and are thus not part of the permanent record of the drawing.

SAMPLE ILLUSTRATIONS

In order to understand the procedures associated with the production of a finished drawing, this section will present some examples of illustrations made using the system. Figure 4 depicts a stylized drawing of a soup can produced with the DRAFTSMAN program. The instruction set given in Listing 4 was used to generate this drawing. As can be seen from this listing, a series of 23 instructions was used for this particular figure. With the

pen in the initial position, the lower left corner of the plotting area, Instructions 0 and 1 define this location as the origin. The next instruction requests the input of the character fonts designated in Instructions 3 - 7. These fonts are thus made available for the input of text to the program and are taken in this particular case from the Index fonts of Fig.3. After the fonts are loaded, the carriage is moved with the pen up 3 inches in both the x and y directions (#8). This point is then designated as a new origin (#9) and the carriage is then moved up 2 inches (#10). With this point as the center, Instruction #11 is used to draw an ellipse with a major axis of 2 inches and a minor axis of 0.7 inches to represent the top of the can. At the completion of the ellipse, the pen is left in the up position, and Instruction No. 12 moves the pen to the right hand edge of the ellipse. From this point a 3 inch line is drawn to represent the side of the can (#13). Notice that a pen position command is necessary in this instruction to change the status of the pen. Instruction No. 14 moves the carriage with the pen up to the other side of the can and that side is subsequently drawn (#15). The H(ome) instruction then moves the carriage to the last defined origin which is on the centerline of the can and 1 inch above its base. This instruction has the effect of decrementing the arrays that refer to the origin so that the next home command will refer back to the point at the origin of the plotter (the lower left hand corner). Instruction No. 17 moves the carriage to the center of the can's base. From this point, the front edge of the can is drawn (#18) as a solid line, and the hidden back edge is drawn as a dotted line (#19). The carriage is then moved to the center of the can (#20). At this point in the input sequence, a size command was used to determine the length of the text string that was to be entered here. This command does not appear in the stored instruction sequence but it returned the value 1.24 inches for this length. To center the label, the pen is then moved .62 inches left (#21) and the text is entered. Stored text commands always begin with W to indicate that Words are to be plotted and

the last two numbers indicate the size and direction to plot the text. In this case the size is 4 and the direction is 0 (horizontal). Vertical characters are indicated by a 6 in the last character. The figure is now complete and the carriage is returned to the origin of the plotter by the H(ome) command(#23).

This drawing has several errors, the dotted ellipse representing the bottom of the can (#19) has the wrong minor axis, and the label reads SOAP instead of SOUP (#22). Figure 4b shows the can plotted correctly with the errors corrected by use of the V(erify) utility. The instructions for this print are given in Listing 5. Notice that Instruction No. 8 has also been changed to start the figure at an x value of 7 inches so that both figures could be drawn on the same print. Also, a number of Instructions have been added to draw a border around the figures and label the two versions as (a) and (b).

Figures 5 thru 7 illustrate some drawings that have been produced using these programs. Figure 5 illustrates a drawing produced for a machinist to fabricate an adapter flange for a vacuum system used in our laboratory. Of particular interest is the use of the >(arrow) command to draw arrows on some of the lines. This command is designed to draw an arrow with a specified size either in the direction of last carriage movement (>) or antiparallel to that direction (<). Figure 6 shows a pie chart which details the usage of one of the accelerators in our laboratory. The draw at an angle command (A##) was used in this print to divide the circle into the pie shaped segments. Finally, Figure 7 depicts a schematic of the safety interlock system for an electron accelerator. This figure utilizes essentially the entire gamut of instructions available to produce a schematic electrical circuit drawing which can be saved on diskette as a permanent part of the documentation for the accelerator. These figures are meant to be illustrative of some of the capabilities of the system. Ultimately, the uses are limited by the imagination of the user.

CONCLUSION

We have developed a software system that allows the Apple II computer system to produce illustrations on an inexpensive digital plotter. This system can be used to produce camera ready figures for inclusion in technical reports, for documentation, or for preparing vue-graphs or machinists prints. The figures can be constructed of straight line segments or portions of ellipses or circles and can be labeled with any of more than 700 characters and graphic symbols. The system can be improved in several aspects by rewriting some of the routines in assembly language for faster execution, particularly the segments used to generate circles and ellipses. The interface driver to the plotter is written in 6502 assembly code and can be modified to interface to a variety of laboratory plotters. At present, a Pascal version of this system is being incorporated into a multisegmented program designed not only to provide drafting capabilities but data input and manipulation as well.

APPENDIX A

The Apple II computer and the Hiplot plotter are interfaced through the binary I/O program BPLOT. This program is designed to take the values of the x and y offsets and the proper pen position (up or down) generated by DRAFTSMAN and generate the appropriate series of ASCII characters to control the plotter as shown in Fig. 1. Although these functions could be written in Applesoft, Basic routines to generate these characters are prohibitively slow, so the driver was written in 6502 assembly code. This choice has the added advantage of permitting easier modification to interface with different plotters without disturbing the fundamental DRAFTSMAN program. Listing 6 gives a compiled version of BPLOT using the Microproducts Assembler/Editor (10).

The DRAFTSMAN program interacts with the output driver BPLOT through the series of variables and subroutines listed in Table 3. The DRAFTSMAN program calculates the x and y offsets to the next point to be plotted and converts them to double precision binary numbers which have the high and low bytes HL, HH, VL, and VH which are poked into the proper locations in BPLOT. The variable PC is used to indicate the pen status, ANGLE specifies the angular rotation (0=hor., 6=vert.), TIME specifies the delay between successive character outputs, XVEC and YVEC are used to input the Hershey character vectors, and SIZE may be used to specify the character size.

The program, BPLOT, is composed of a number of segments that generate a table of ASCII characters to control the Hiplot plotter, and output these characters to the plotter. The main program , DRAFTSMAN, calculates the offset from the current location to the next point as double precision (16 bit) binary numbers which are poked into the locations $85D6-$85D9 as shown in Listing 7. In the case of the Hershey characters, the X and Y-offsets are poked into the single precision locations $8418 and $842C. In this latter case, a subsequent CALL LGEN (line 8720) converts these single precision values to double precision and stores them in the appropriate locations. In both cases, the

Vector Generator routine is called (either directly from line 7140 or as an extension of LGEN) and a table of ASCII characters is generated and stored in a table beginning at location $8600. This table is generated by the assembly language routine beginning at location $843F and is modeled after the Basic language routine given in Listing 7. This routine which is included in the Hiplot instruction manual (6) calculates the best straight line between the current pen location and the location specified by the X- and Y-offsets. Listing 7 indicates the correspondence between the variables used in the Basic program and the variables and locations of the BPLOT vector generator routine. The output table begins with the pen control character ("y" or "z" to indicate pen up or down), and contains a series of characters from the ASCII set "p".."w" to control the motion of the carriage. The table ends with the ASCII character "x" to signify the end of the vector. This routine makes use of standard double precision routines to ADD ($8599), SUBTRACT($85BC), and MOVE($85C7) double precision binary numbers.

Once the table corresponding to the plotter movement is generated, the PLOT routine ($83B8) outputs one character at a time to the plotter through the RS-232 interface installed in slot #2. Each character is output the number of times specified by the parameter SIZE with a selectable delay between successive characters. The table is output character by character until the occurrence of the character "x" which signifies the end of the table. At this point, the output is terminated, various locations are restored to their initial values, and control is returned to the calling program.

To modify this program for plotters other than the Hiplot plotter, it is necessary to replace the vector generator subroutine with a subroutine that will generate the appropriate characters for the plotter of interest. In addition, the BPLOT program contains two routines to accept a single character (CHAR) and output it via the RS-232 serial port (ALPHA). Although these

locations are not used in DRAFTSMAN, they are available for other programs which might incorporate the BPLOT program.

REFERENCES

1. C.E. Dick and J. Hilsenrath, "Utility Programs for Generating the Hershey Character Fonts on Microcomputers and Laboratory Plotters," NBS Technical Note 1176, June 1983, National Bureau of Standards, Washington, DC, 20234.
2. A.V. Hershey, "Calligraphy for Computers," NWL Technical Report No. 2101, August 1967, U.S. Naval Surface Weapons Laboratory, Dahlgren, VA.
3. N.M. Wolcott and J. Hilsenrath, "A Contribution to Computer Typesetting Techniques: Tables of Coordinates for Hershey's Repertory of Occidental Type Fonts and Graphics Symbols," NBS Special Publication No. 424, National Bureau of Standards, Washington, DC, 20234.
4. "DOS 3.3", copyright 1980, Apple Computer Inc., 10260 Bandley Drive, Cupertino, CA, 95014. Apple software product #A2L0036.
5. "Applesoft", copyright 1978, Apple Computer Inc., 10260 Bandley Drive, Cupertino, CA, 95014. Apple software product #A2L0006.
6. The plotter utilized is a Hiplot Model DMP-2 Digital Plotter, manufactured by the Houston Instrument Co., One Houston Square, Austin, TX, 78753.
7. Serial Interface Card, Apple Computer Inc., 10260 Bandley Drive, Cupertino, CA, 95014. Apple hardware product #A2L0008.
8. C.E. Dick, A Pascal language program for data retrieval, storage, reduction, and plotting on a miocrocomputer and laboratory plotter." In preparation.
9. "Apple-doc", software copyright 1979, Roger Wagner, Southwestern Data Systems, Box 982, Santee, CA, 92071.
10. "6 Character Label Editor/Assembler", Version 6.1, software copyright 1979, Microproducts Inc., 2107 Artesia Blvd., Redondo Beach, CA, 90278.

Table 1. A listing of the main program segments and the corresponding line numbers for DRAFTSMAN.

Name	Lines	Program Function
Logo	10-180	Initialization, sets HIMEM, defines the DOS token (D$), and prints the logo.
Instr.	500-560	Retrieves the user instructions from binary files INSTR.1 to INSTR.5 and displays them.
Bload	1000-1100	BLOADS BPLOT, initializes variables pointing to locations in BPLOT, and requests disk #.
Init.	2000-2200	Main program start and variable init. Sets save flag (SF) if input is from disk.
Input	3000-3390	Main instruction input routine, requests input from keyboard, decodes it and sets appropriate plotting flags.
Decode	3500-3730	Decodes flags and instructions given in the instruction input loop at 3000-.
Exit	4000-4060	Exit routines, saves appropriate variables to prepare to save illustration on diskette.
Fonts	5000-5350	Inputs Hershey fonts from appropriate files.
Load	6000-6180	Inputs saved drawing from disk.
Save	6500-6610	Saves drawing to text file on disk.
Out	7000-7190	Output vector generator, calls appropriate routines in BPLOT to generate and output ASCII character string to the plotter.
Text	8000-8190	Inputs text string to be plotted on plotter.
Hershey	8200-8920	Decodes text string, calculates coordinates for Hershey characters, and outputs them to plotter.
Display	9000-9070	Displays text characters as decoded.
X-Y	10000-10050	Decodes XY input instructions.
Rho	11000-11030	Calculates rho values.
Error	12000-12120	Error handling routines.
Circle	13000-13180	Decodes circle, ellipse, and arc inputs.
Dot	15000-15070	Decodes dotted line output instructions.
Edit	16000-16300	Instruction editing and printing routines.
Syntax	20000-20030	Checks input for illegal characters.

Table 2. A listing of the instructions input to the user from the files INSTR.1 through INSTR.5.

DRAFTSMAN INSTRUCTIONS

COMMANDS ARE GIVEN BY TYPING IN KEY LETTERS THAT THE INTERPRETER CAN TRANSLATE TO MOVE THE PEN ON THE HIPLOT PLOTTER. DIMENSIONS CAN BE SPECIFIED EITHER IN INCHES OR IN CENTIMETERS.
COMMANDS OTHER THAN DISK COMMANDS MAY BE COMBINED IN ANY ORDER IN ONE STATEMENT SUCH AS PU3.5IA30 WHICH PARSES AS A PEN UP MOVE OF 3.5 INCHES AT AN ANGLE OF 30 DEG. THIS MAY ALSO BE WRITTEN A30PU3.5I ETC.
TO REVIEW COMMANDS ENTER <?> IN RESPONSE TO PROMPT.
TO EDIT COMMANDS ENTER <V> IN RESPONSE TO PROMPT.

KEY	COMMAND	EXAMPLE
	MULTIPLE COMMANDS	
A##	MOVE AT ANGLE ##	A45PU3I
@##	DRAW CIRCLE W//RAD.##	@3.1C
C,I	CENTIMETERS, INCHES	PU3CR
PU,PD	PEN CONTROL UP/DOWN	PD2CD
R,L	MOVE RIGHT, LEFT	PU1IL
U,D	MOVE UP, DOWN	PD2CD
>	DRAW ARROW	.5I>
	CONTROL COMMANDS	
*	DRAW DOTTED LINE	.05*1IR
E	ERASE LAST LINE	E
O	SET CURRENT LOCATION AS ORIGIN	O
H	RETURN TO LATEST ORIGIN	H
T	INSERT TEXT	T
PA#	CHANGE PEN SIZE (PAUSE)	PA2
F	CHOOSE LETTER FONT	F
S	CALC. LENGTH OF TEXT	S
	DIRECT MOVEMENT	
X#Y#	MOVE IN STRAIGHT LINE TO POINT X+DX, Y+DY	IX3Y4.5

SPECIAL INSTRUCTIONS FOR F(ONT),P(AUSE),T(EXT) AND S(IZE) COMMANDS.
THE F COMMAND ALLOWS THE CURRENT FONT TO BE CHANGED. FOLLOW THE PROMPTS GIVEN.
THE PA COMMAND GIVES A BUILT IN PAUSE TO ALLOW THE USER TO CHANGE THE PEN OR FOR ANY OTHER REASON.
TO ENTER TEXT VIA THE T COMMAND, THE DEFAULT MODE IS ALL CAPS, WHICH ARE SHOWN IN INVERSE VIDEO. TO CHANGE TO LOWER CASE AND VICE VERSA, USE THE <ESC> KEY AS A TOGGLE. THE MODE REMAINS THE SAME UNTIL TOGGLED AGAIN. GREEK LETTERS AND MATH SYMBOLS ARE ENTERED BY PRECEDING THE APPROPRIATE KEY WITH EITHER A <CTRL-G> OR A <CTRL-S> AND ARE SHOWN FLASHING.
THE S COMMAND CALCULATES THE LENGTH OF A TEXT STRING FOR CENTERING PURPOSES.

SPECIAL INSTRUCTIONS FOR THE @(CIRCLE) COMMAND.
THE @ COMMAND WILL DRAW CIRCLES OF A GIVEN RADIUS OR ELLIPSES WITH SPECIFIED MAJOR AND MINOR AXES.
TO DRAW A CIRCLE WITH A GIVEN RADIUS, SIMPLY SPECIFY THE RADIUS AND THE @ SYMBOL: E.G. @2 OR 2@ WILL DRAW A 4 IN. DIAMETER CIRCLE.
TO DRAW AN ELLIPSE, SPECIFY THE MAJOR AND MINOR AXES SEPARATED BY THE @ SYMBOL: E.G. @2@1 OR 2@1@ WILL DRAW AN ELLIPSE WITH A 4 IN. MAJOR AXIS AND A 2 IN. MINOR AXIS.
TO DRAW AN ARC OF A CIRCLE, SPECIFY THE ANGULAR RANGE SEPARATED THE ^ SYMBOL: E.G. 2@^30^120 OR @2^30^120 WILL DRAW A 2 IN. ARC BETWEEN 30 AND 120 DEGREES.
SPECIAL INSTRUCTIONS FOR *(DOTTED LINE) COMMAND.
ANY LINE CAN BE DOTTED BY INSERTING THE * CHARACTER AND THE DOT LENGTH IN THE COMMAND STRING. FOR EXAMPLE, THE COMMAND .05*1R OR *.05R1 WILL DRAW A DOTTED LINE TO THE RIGHT WITH .05 IN. DOT UNITS.
CAUTION!! CIRCLES AND ELLIPSES MAY ALSO BE DOTTED, BUT THE DOT LENGTH HAS NO MEANING AND YOU MAY GET A DIV BY ZERO ERROR. TO AVOID THIS, JUST USE THE DOT SYMBOL <*>, FOLLOWED BY THE CIRCLE SYMBOL <@> AND THE RADIUS SUCH AS *@.5. SIMILARLY, IN THE CASE OF ELLIPSES AND ARCS, USE *@1@2 AND *@.5^30^120.

Table 3. Correspondence of locations between DRAFTSMAN and BPLOT.

DRAFTSMAN VARIABLE	LOCATION decimal	BPLOT VARIABLE	LOCATION hexadecimal
OUT	33720	PLOT	$83B8
ALPHA	33793	ONECHR	$8401
SIZE	33801	SIZE	$8409
ANGLE	33802	ANGLE	$840A
CHAR	33803	CHAR	$840B
TIME	33804	DELAY	$840C
LGEN	33805	LETTER	$840D
PC	33811	PEN	$8412
XVEC	33816	XVEC	$8418
YVEC	33836	YVEC	$842C
VGEN	33855	GO	$843F
VL	34262	INPUT	$85D6
VH	34263	YH	$85D7
HL	34264	XL	$85D8
HH	34265	XH	$85D9

FIGURE CAPTIONS

Figure 1. A schematic illustration of the carriage movement and pen position control generated on the Hiplot plotter upon receipt of the ASCII characters shown.

Figure 2. A representation of the geometry and variables used to define the plotter carriage location.

Figure 3. The Hershey characters available to the DRAFTSMAN program from the 22 text files on the diskette.

Figure 4. A stylized drawing of a soup can. Figure 4a was drawn with the instruction set of Listing 4 and contains several errors. In Fig. 4b, the errors have been corrected as given in Listing 5.

Figure 5. An example of a vacuum adapter flange produced by the software system.

Figure 6. An example of a pie chart produced by the system.

Figure 7. An example of an electrical wiring diagram produced by the system.

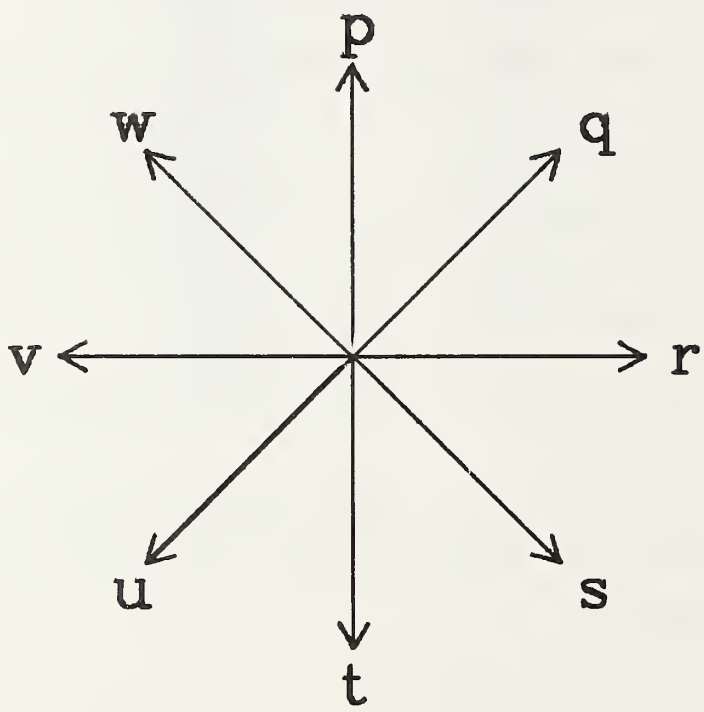

y : pen up

z : pen down

FIGURE 1.

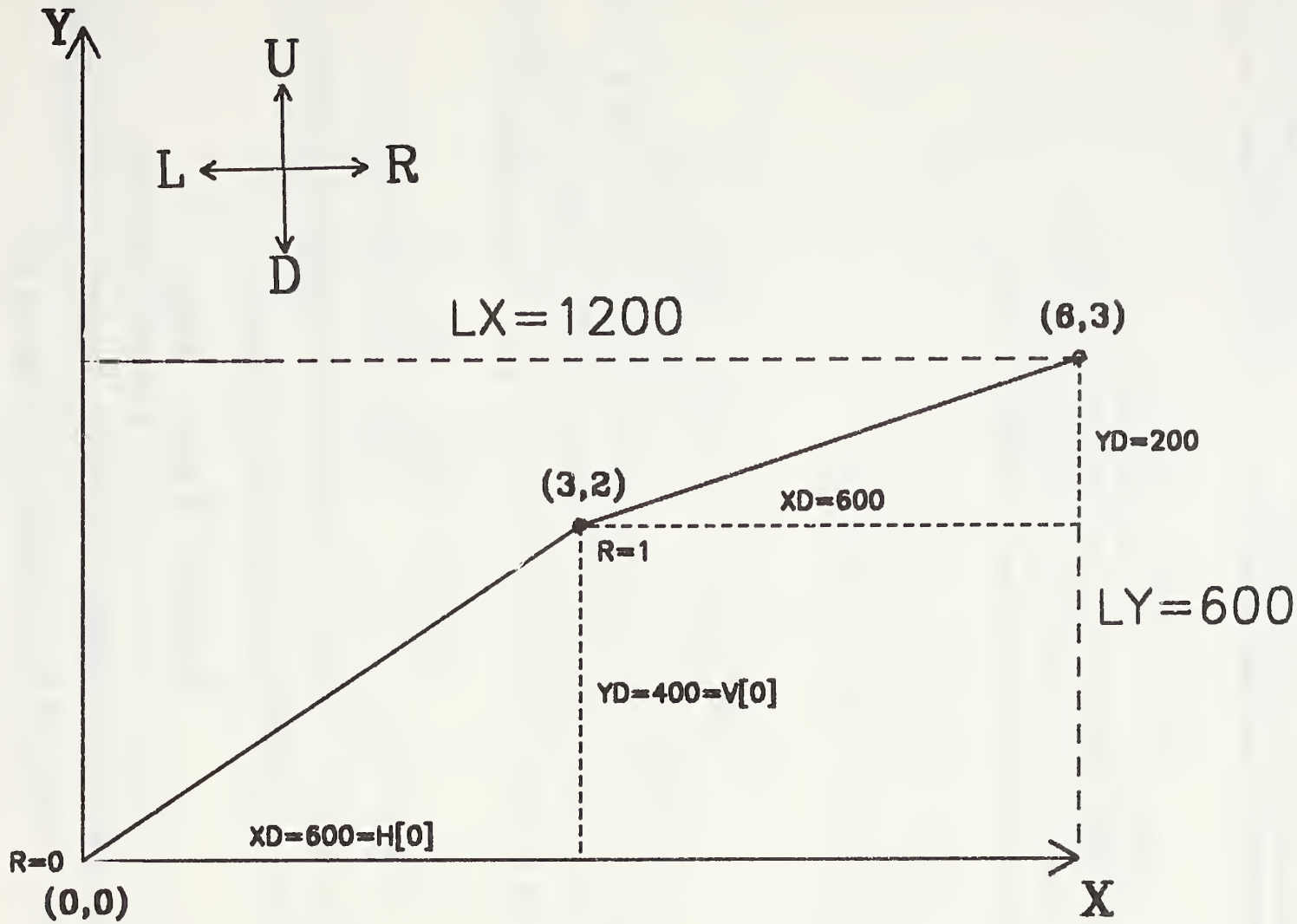
Y
U
L
R
D
LX=1200
(6,3)
YD=200
(3,2)
XD=600
R=1
LY=600
YD=400=V[0]
XD=600=H[0]
R=0
(0,0)
X

FIGURE 2.

Simplex Font: Size 1

!"#$%&'()*+,-./0123456789:;<=>
@ABCDEFGHIJKLMNOPQRSTUVWXYZ±∫
°abcdefghijklmnopqrstuvwxyz[]
ΩαβγδεζηϑικλμνξοπρστυφχψωΣΠΓΘ

Cartographic Font: Size 2

!"#$%&'()*+,-./0123456789:;<=>
@ABCDEFGHIJKLMNOPQRSTUVWXYZ±∫
°abcdefghijklmnopqrstuvwxyz{}

Index Font: Size 2

!"#$%&'()*+,-./0123456789:;<=>?
@ABCDEFGHIJKLMNOPQRSTUVWXYZ±∫
°abcdefghijklmnopqrstuvwxyz{}
ΩαβγδεζηϑικλμνξοπρστυφχψωΣΠΓΘ

Math Symbols: Size 2

±∓×·÷≠≡<>≤≥∝∼∧
√[]→↑←↓∂∇§∫∮∞†‡

Complex Font: Size 2

!"#$%&'()*+,-./0123456789:;<=>?
@ABCDEFGHIJKLMNOPQRSTUVWXYZ
°abcdefghijklmnopqrstuvwxyz{}
ΩαβγδεζηϑικλμνξοπρστυφχψωΣΠΓΘ

Script Font: Size 2

!"#$%&'()*+,-./0123456789:;<=>?
@ABCDEFGHIJKLMNOPQRSTUVWXYZ±∫
°abcdefghijklmnopqrstuvwxyz{}

Gothic Font: Size 2

!"#$%&'()*+,-./0123456789:;<=>?
@ABCDEFGHIJKLMNOPQRSTUVWXYZ±∫
°abcdefghijklmnopqrstuvwxyz{}

FIGURE 3.

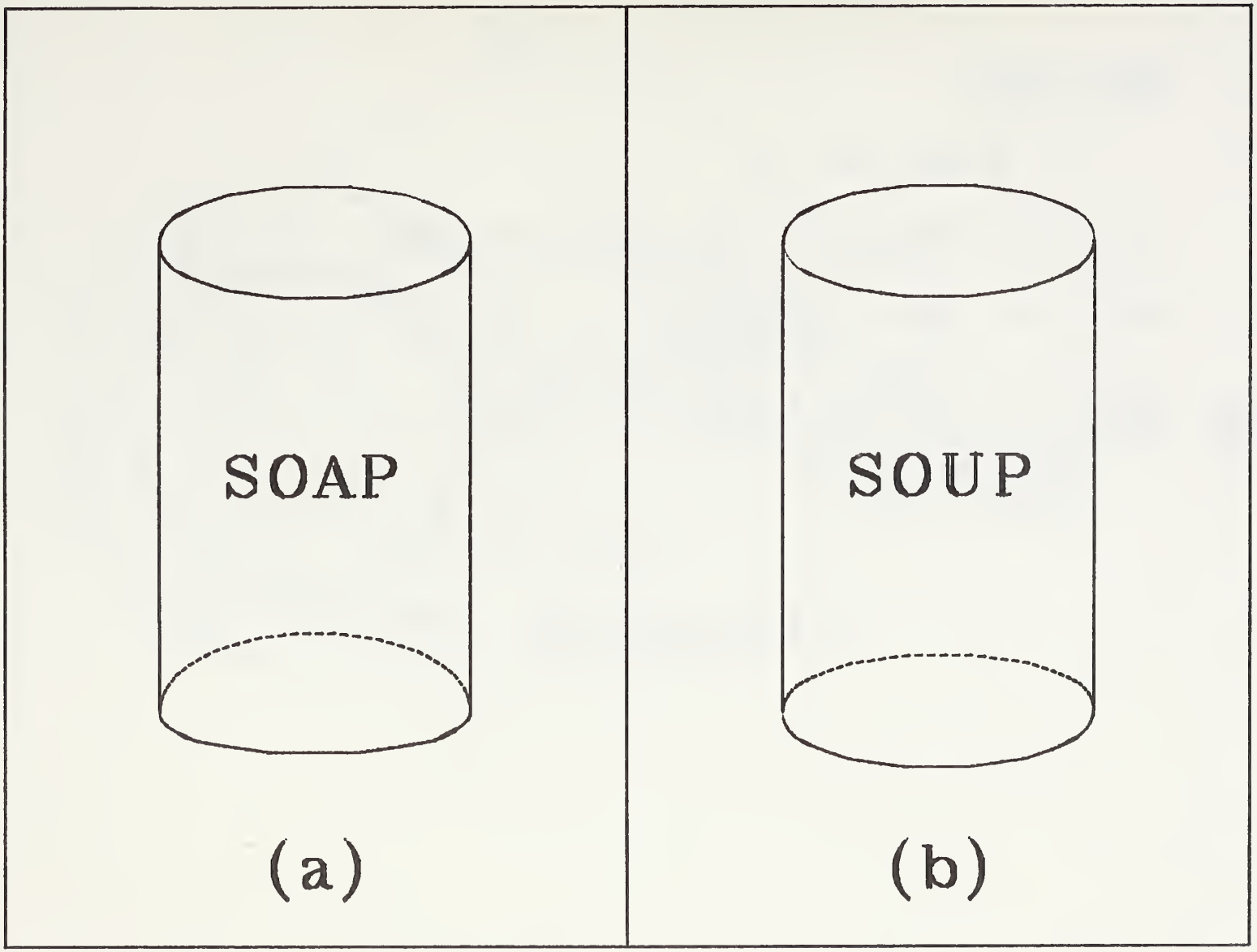

FIGURE 4.

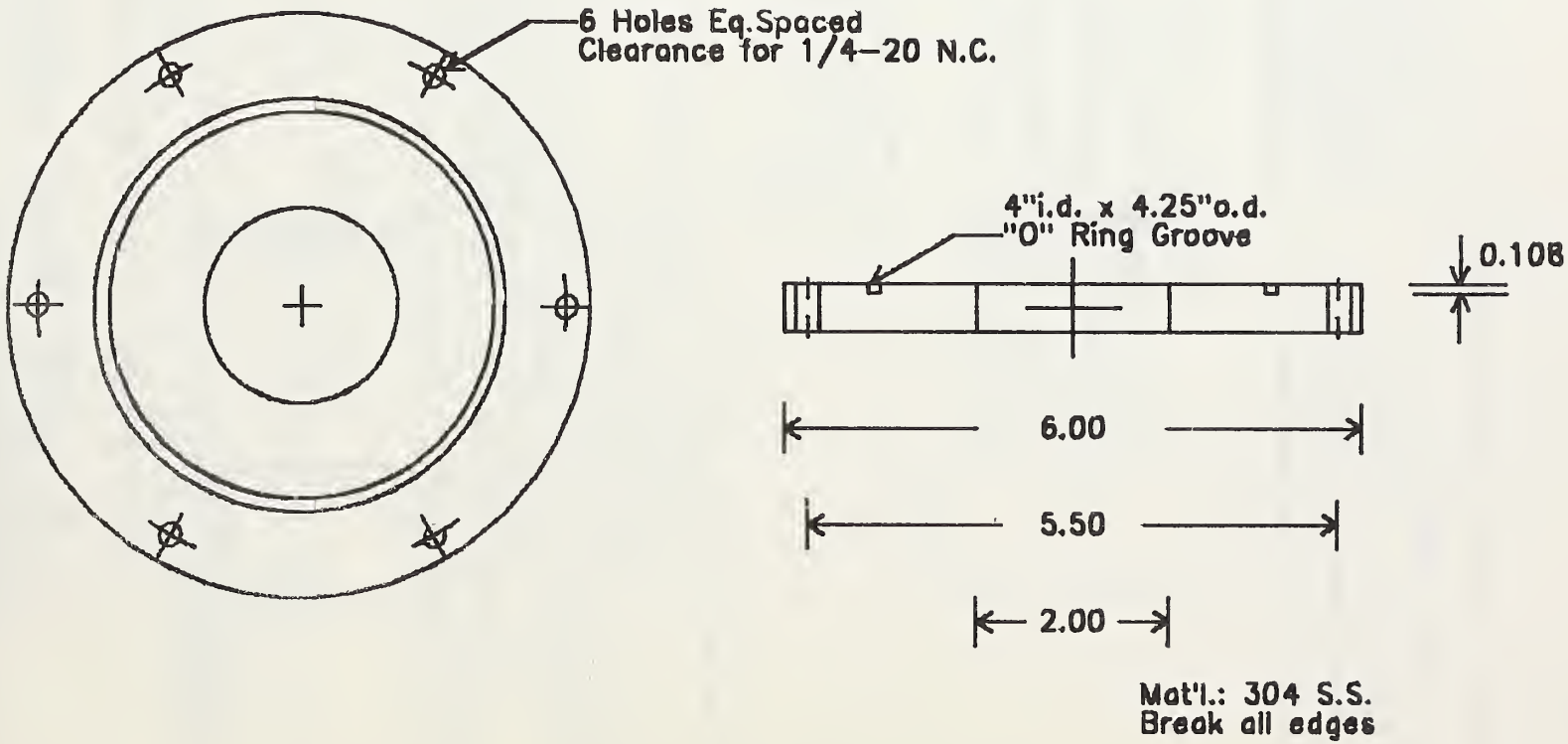

Adapter Flange

Scale 1:2

FIGURE 5.

Accelerator Usage

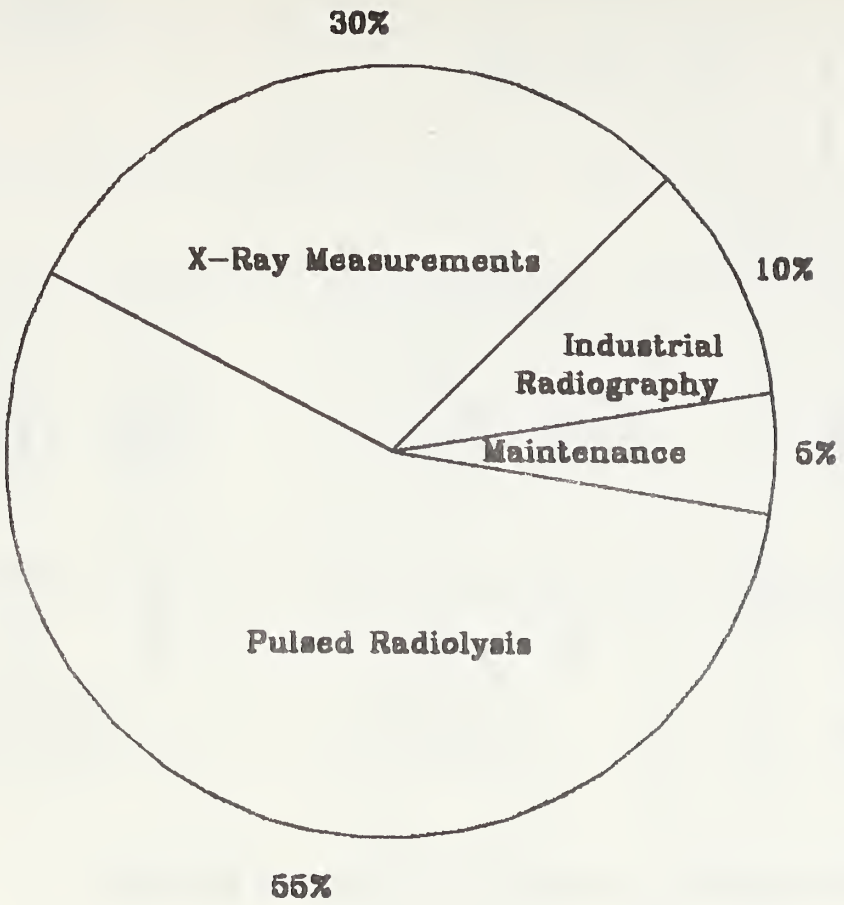

FIGURE 6.

4-MeV Electron Van de Graaff Safety Interlock System

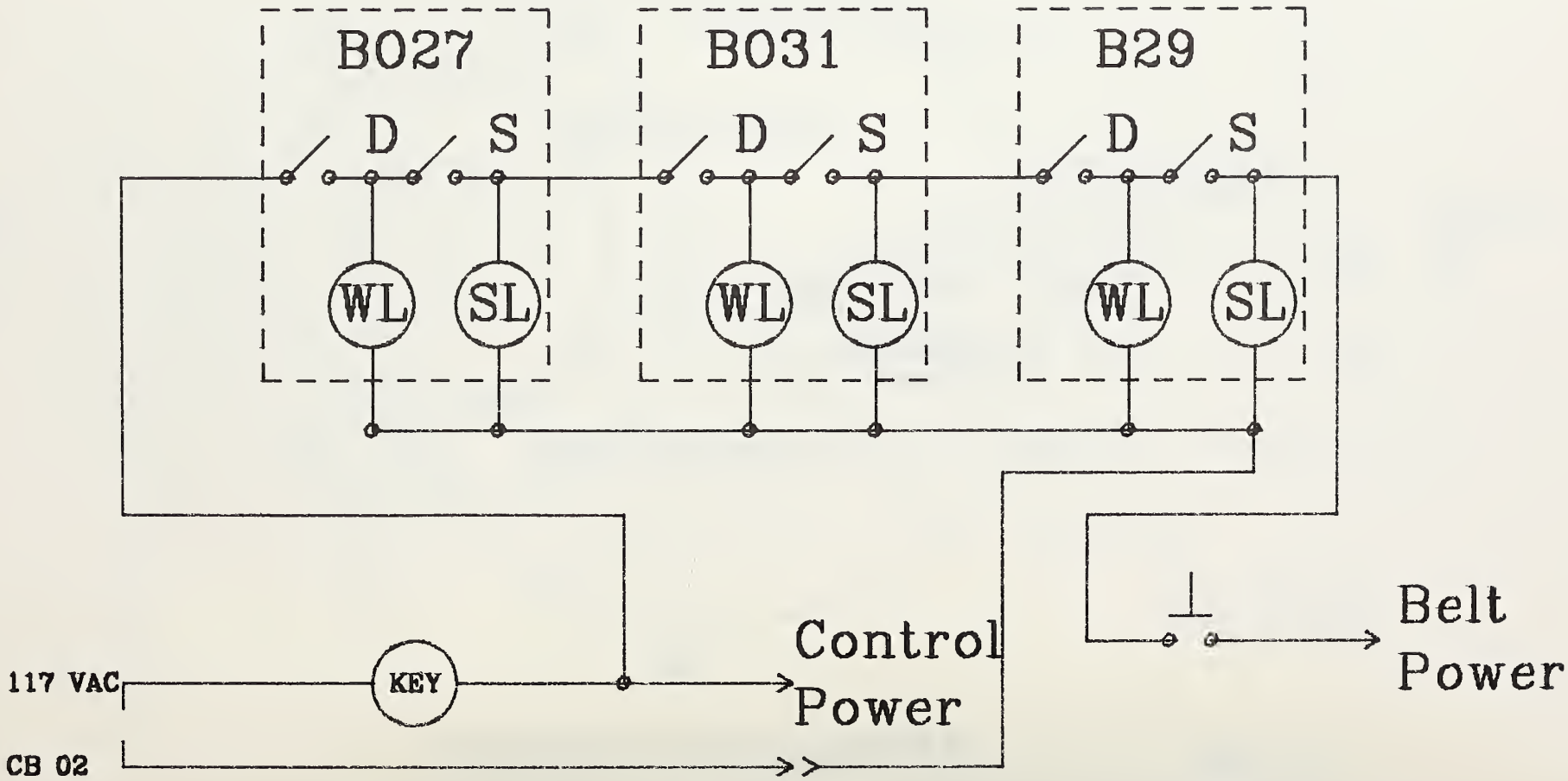

D:Door Switch; S:Scram Switch; WL:Warning Light; SL:Scram Light

FIGURE 7.

LISTINGS

1. A catalog of the diskette containing the software system.
2. The Applesoft Basic listing of the main program, DRAFTSMAN.
3. A listing of the variables used in DRAFTSMAN and the line numbers where they occur. This listing was produced with the variable documentation program of Wagner (9).
4. The instruction set used to produce the drawing of a can as shown in Fig. 4a. This illustration has several errors which are corrected as shown in Fig. 4b.
5. The edited version of the instruction set of Listing 4 which was used to produce the corrected can drawing of Fig. 4b.
6. The compiled listing of the assembly language I/O driver program BPLOT.
7. A listing of a Basic program to calculate the best line between two points which has been used in BPLOT to generate the appropriate string of ASCII characters to control the plotter. The comments indicate the correspondence between this program and the appropriate locations in BPLOT.

LISTING 1.

```
 CATALOG

DISK VOLUME 254

*A 052 DRAFTSMAN
*T 007 INDEX NUMBERS
*T 008 INDEX CAPS
*T 009 INDEX SMALL
*T 009 INDEX GREEK
*T 005 SIMPLEX NUMBERS
*T 005 SIMPLEX CAPS
*T 006 SIMPLEX SMALL
*T 006 SIMPLEX GREEK
*T 007 COMPLEX NUMBERS
*T 009 COMPLEX CAPS
*T 009 COMPLEX SMALL
*T 010 COMPLEX GREEK
*T 004 CARTO NUMBERS
*T 005 CARTO CAPS
*T 005 CARTO SMALL
*T 010 GOTHIC NUMBERS
*T 020 GOTHIC CAPS
*T 011 GOTHIC SMALL
*T 008 SCRIPT NUMBERS
*T 012 SCRIPT CAPS
*T 009 SCRIPT SMALL
*T 007 MATH SYMBOLS
*B 004 BPLOT
*B 006 INSTR.1
*B 005 INSTR.2
*B 005 INSTR.3
*B 005 INSTR.4
*B 005 INSTR.5
 T 006 TEST
 T 004 SOAP
 T 005 SOUP

]
```

LISTING 2.

LIST

```
10  HIMEM: 33719
20  ONERR  GOTO 12000
30  HOME :BELL$ =  CHR$ (7):D$ =  CHR$ (4)
40 A$ = "*********************THE ELECTRONIC DRAFTSMAN"
50  HTAB (5): VTAB (10): PRINT "*********************************"
60  FOR I = 1 TO 5: HTAB (5): VTAB (10 + I): PRINT "*": HTAB (36): VTAB (1
     0 + I): PRINT "*": NEXT I
70  HTAB (5): VTAB (16): PRINT "*********************************"
80  HTAB (15): VTAB (12): PRINT "WELCOME TO"
90  FOR I = 1 TO  LEN (A$) - 23: HTAB (8): VTAB (14): PRINT ( MID$ (A$,I,2
     4)):BELL$;: FOR J = 1 TO 50: NEXT J: NEXT I
100  HTAB (15): VTAB (20): PRINT "COPYRIGHT 1981"
110  HTAB (20): VTAB (21): PRINT "C. E. DICK"
120  HTAB 25: VTAB 22: PRINT "REV. II.3.2.83"
130  VTAB (24): PRINT "HIT ANY KEY TO BEGIN:":BELL$:BELL$;: GET A$
140  HOME : VTAB (5): PRINT "THIS PROGRAM IS DESIGNED TO ALLOW YOU TOCREAT
     E YOUR OWN MECHANICAL OR SCHEMATIC DRAWINGS, LETTER THEM, AND SAVE TH
     EM ON DISK FILES FOR LATER RECALL.
150  PRINT BELL$
160  PRINT BELL$: INPUT "DO YOU NEED DIRECTIONS ?":Q$: IF  LEFT$ (Q$,1) =
     "Y" THEN  GOSUB 500
170  IF  LEFT$ (Q$,1) <  > "N" THEN 160
180  GOTO 1000
500  REM  INSTRUCTIONS
510  FOR I = 1 TO 5
520  PRINT D$;"BLOAD INSTR.";I
530  VTAB 24: PRINT "STRIKE ANY KEY TO CONTINUE...";: GET Q$
540  PRINT BELL$: HOME
550  NEXT
560  HOME : SPEED= 255: RETURN
1000  HOME : PRINT "NOW LOADING BINARY PLOTTING PROGRAMS"
1010  PRINT D$;"BLOAD BPLOT"
1020  PRINT : PRINT "POSITION PEN IN LOWER LEFT CORNER": PRINT "STRIKE ANY
      KEY WHEN READY-->";BELL$: GET Q$:LX = 0:LY = 0
1030  DIM B$(502),X$(160)
1040 OUT = 33720:LGEN = 33805:ALPHA = 33793:VGEN = 33855
1050 PC = 33811:XVEC = 33816:YVEC = 33836
1060 SIZE = 33801:ANGLE = 33802:CHAR = 33803:TIME = 33804
1070 VL = 34262:VH = 34263:HL = 34264:HH = 34265
1080 XX = 200: POKE TIME,25
1090 DF =  PEEK (43624)
1100  PRINT BELL$: INPUT "DISK DRIVE NO. OF DATA:":DD: IF DD < 1 OR DD > 2
      THEN  PRINT "ERROR...";: GOTO 1100
2000  REM  *** MAIN PROGRAM ***
2100  HOME :J = 0:PI = 3.14159264:R = 0:DOT = 0
2200  PRINT BELL$: INPUT "IS DRAWING ON DISK ?":Q$: IF  LEFT$ (Q$,1) = "Y"
      THEN SF = 1: GOTO 6000
2210 O$ = ""
3000  REM   PROGRAM INSTR. LOOP
3010 A$ = "":R$ = "":RHO = 0:CF = 0: IF SF THEN  HTAB (8): VTAB (10): PRINT
     "EXECUTING INSTRUCTION #";K
3020  IF SF THEN  PRINT : FOR VV = 1 TO 255: PRINT " ";: NEXT : HTAB (1): VTA
     (12): PRINT "CURRENT INSTR.:";B$(K): PRINT : PRINT "PEN POSITION X=";
     LX / 200;" Y=";LY / 200: GOTO 3060
3030  PRINT : PRINT "PEN IS PRESENTLY AT X=";LX / 200;"    Y=";LY / 200
3035  IF J = 475 THEN B$(J) = "Q": GOTO 4010
```

```
3040  PRINT BELL$: PRINT "INSTRUCTION NO.(";J;")";: INPUT " ";B$(J)
3050  GOSUB 20000
3060  DEF  FN C(I) =  ASC ( MID$ (B$(J),I,1))
3070  IF J > 450 THEN  PRINT BELL$;BELL$;"WARNING!!ONLY ";475 - J;" INSTRU
      CTIONS LEFT"
3080  FOR I = 1 TO  LEN (B$(J)):B$ =  MID$ (B$(J),I,1)
3090  IF I >  LEN (B$(J)) THEN 3560
3100  IF B$ = "V" THEN  GOTO 16000
3110  IF B$ = "?" THEN  GOSUB 500: GOTO 3000
3120  IF B$ = "*" AND RHO = 0 THEN  GOSUB 11000:B$ = "*": IF RHO = 0 THEN
      RHO = 0.1
3130  IF B$ = "*" THEN DOT = 1:DL = RHO *  INT (XX):RHO = 0: GOTO 3390
3140  IF B$ = "@" THEN OF = 1: GOSUB 13000: GOTO 3390
3150  IF B$ = "U" THEN A = 90: GOTO 3390
3160  IF B$ = "S" THEN LF = 1: GOTO 3020
3170  IF B$ = "D" THEN A = 270: GOTO 3390
3180  IF B$ = ">" THEN AF = 1: GOTO 3390
3190  IF B$ = "<" THEN AF = 1:A = A + PI: GOTO 3390
3200  IF B$ = "R" THEN A = 0: GOTO 3390
3210  IF B$ = "L" THEN A = 180: GOTO 3390
3220  IF B$ = "I" THEN XX = 200: GOTO 3390
3230  IF B$ = "O" THEN OF = 1: GOTO 3390
3240  IF B$ = "C" THEN XX = 79.74: GOTO 3390
3250  IF B$ = "P" THEN I = I + 1: IF  MID$ (B$(J),I,1) = "D" THEN PP = 1: GOTO
      3390
3260  IF B$ = "P" AND  MID$ (B$(J),I,1) = "A" THEN  PRINT BELL$;"CHANGE PE
      N TO SIZE # ";VAL ( MID$ (B$(J),I + 1,1)): PRINT BELL$;"HIT ANY KEY
      TO CONTINUE ": GET A$:A$ = "": GOTO 3710
3270  IF B$ = "P" THEN PP = 0: GOTO 3390
3280  IF B$ = "Q" THEN  PRINT : PRINT "PLEASE STAND BY...";BELL$:MM =  FRE
      (0):I =  LEN (B$(J)):XX = 200: GOTO 3390
3290  IF B$ = "T" THEN B$ = "W": GOSUB 8000: GOTO 3390
3300  IF B$ = "F" THEN FF = 1: GOTO 3390
3310  IF B$ = "H" THEN HF = 1: GOTO 3390
3320  IF B$ = "E" THEN EF = 1: GOTO 3390
3330  IF B$ = "K" THEN R$ =  MID$ (B$(K),2, LEN (B$(K)) - 3):IV =  VAL ( RIGHT$
      (B$(K),1)):IW =  INT (( VAL ( RIGHT$ (B$(K),2))) / 10): GOSUB 9170: GOTO
      3710
3340  IF B$ = "A" THEN A$ = A$ +  MID$ (B$(J),I + 1,1):I = I + 1: IF I <  LEN
      (B$(J)) AND ( FN C(I) > 45 AND  FN C(I) < 58) THEN 3340
3350  IF B$ = "A" THEN A =  VAL (A$): IF I <  LEN (B$(J)) THEN I = I - 1
3360  IF B$ = "A" THEN  GOTO 3390
3370  IF B$ = "X" OR B$ = "Y" THEN  GOSUB 10000
3380  GOSUB 11000
3390  NEXT : IF B$ = "Q" THEN 4010
3500  REM  FLAG DECODING ROUTINES
3510  IF B$ = "W" THEN 3710
3520  IF FF AND  NOT (SF) THEN  GOSUB 5000:FF = 0:J = J - 1: GOTO 3710
3530  IF FF AND SF THEN  FOR I = 1 TO 5:K = K + 1:N$(I) = B$(K): NEXT I: GOSUB
      5220:FF = 0: GOTO 3710
3540  IF (OF) OR (CF) THEN H(R) = XD:V(R) = YD:R = R + 1:XD = 0:YD = 0:OF =
      0: IF  NOT (CF) THEN 3710
3550  IF XYF THEN  GOSUB 7000:RHO =  SQR (X * X + Y * Y):A =  ATN (Y / X):
      XYF = 0: GOTO 3710
3560  IF EF THEN X =  - X:Y =  - Y:FF = 0: GOSUB 7030:EF = 0:J = J - 1: GOTO
      3710
3570  IF HF AND R > 0 THEN FF = 0:PX =  - XD: PY =  - YD: GOSUB 7060:R = R -
      1:YD = V(R):XD = H(R):HF = 0: GOTO 3710
3580  IF HF AND R = 0 THEN HF = 0: GOTO 3710
3590  IF CF THEN LIMIT = 1: FOR I = A(1) * 2 / PI TO .99 + A(2) * 2 / PI:X
```

```
     =  COS (I * PI / 2) * AX(1):Y =  SIN (I * PI / 2) * AX(2): GOSUB 700
    0: IF X OR Y THEN I = .99 + A(2) * 2 / PI
3600  IF CF THEN  NEXT I:LIMIT = 0: IF X OR Y THEN R = R - 1:YD = V(R):XD =
    H(R):HF = 0:CF = 0: GOTO 3710
3610  IF CF THEN PP = 0:X = AX(1) *  COS (A(1)):Y = AX(2) *  SIN (A(1)): GOSUB
    7000:PP = 1: FLASH :DA = PI / (40 * (AX(1) + AX(2))): PRINT : PRINT "
    CALCULATING CIRCLE COORDINATES": IF  NOT (DOT) THEN  CALL OUT
3620  IF CF THEN X = AX(1) * ( COS (A(1) + DA) -  COS (A(1))):Y = AX(2) *
    ( SIN (A(1) + DA) -  SIN (A(1))): IF DOT THEN PP =  NOT (PP)
3630  IF CF THEN  GOSUB 7000:A(1) = A(1) + DA: IF A(1) <  = A(2) THEN 3620

3640  IF CF AND  NOT (DOT) THEN  GOSUB 7160
3650  IF CF THEN CF = 0:DOT = 0:X = 0:Y = 0:HF = 1: NORMAL : GOTO 2570
3660  IF  NOT (AF) THEN A = A * PI / 180
3670 X = RHO *  COS (A):Y = RHO *  SIN (A)
3680  IF AF THEN PP = 1:X = RHO *  COS (A + 5 * PI / 6):Y = RHO *  SIN (A +
    5 * PI / 6): GOSUB 7000:X = RHO *  COS (A + 1.5 * PI):PP = 0
3690  IF AF THEN Y = RHO *  SIN (A + 1.5 * PI): GOSUB 7000:X = RHO *  COS
    (A + PI / 6):Y = RHO *  SIN (A + PI / 6):PP = 1: GOSUB 7000:AF = 0:PP
     = 0: GOTO 3710
3700  GOSUB 7000
3710  IF  NOT (SF) THEN J = J + 1
3720 RHO = 0: IF SF THEN  RETURN
3730  GOTO 3010
4000  REM  EXIT ROUTINES
4010 B$(J) =  STR$ (LX):B$(J + 1) =  STR$ (LY):B$(J + 2) =  STR$ (XD):B$(J
     + 3) =  STR$ (YD):B$(J + 4) =  STR$ (R):J = J + 5
4020  FOR II = 0 TO 10:B$(J) =  STR$ (H(II)):B$(J + 1) =  STR$ (V(II)):J =
    J + 2: NEXT II:B$(J) = "END"
4030  PRINT BELL$: INPUT "WANT TO SAVE DRAWING?":B$: IF  LEFT$ (B$,1) = "Y
    " THEN  GOSUB 4500
4040  PRINT BELL$: INPUT "FINISHED DRAWING? ":Q$: IF  LEFT$ (Q$,1) = "N" THEN
     IF (LX OR LY) THEN  PRINT BELL$: INPUT "RETURN PEN TO (0,0)? ":B$: IF
     LEFT$ (B$,1) = "Y" THEN PP = 0:PX =  - LX:PY =  - LY: GOSUB 7050:XD =
    0:YD = 0
4050  IF  LEFT$ (Q$,1) = "N" THEN  GOTO 2000
4060  IF  LEFT$ (Q$,1) = "Y" THEN  PRINT BELL$: PRINT "---BYE---": END
4070  GOTO 4030
5000  REM  LETTER FONTS
5010  HOME : FOR I = 1 TO 180:X$(I) = "": NEXT
5020  PRINT : PRINT  TAB( 10): INVERSE : PRINT "INPUT LETTER FONTS": PRINT
    : NORMAL : PRINT  TAB( 11):"FONTS AVAILABLE:"
5030  PRINT : PRINT  TAB( 10):"<1>  INDEX": PRINT  TAB( 10):"<2>  SIMPLEX"
    : PRINT  TAB( 10):"<3>  COMPLEX": PRINT  TAB( 10):"<4>  CARTOGRAPHIC"
    : PRINT  TAB( 10):"<5>  SCRIPT": PRINT  TAB( 10):"<6>  GOTHIC": PRINT
    : PRINT
5040 I = 1
5050 N$ = " NUMBERS": PRINT : INPUT "NUMBER FONT <1-6>:":N:N =  INT (N): IF
    N < 1 OR N > 6 THEN  PRINT "REINPUT ": GOTO 5050
5060  GOSUB 5140:
5070 N$ = " CAPS": PRINT : INPUT "UPPER CASE FONT <1-6>:":N:N =  INT (N): IF
    N < 1 OR N > 6 THEN  PRINT "REINPUT ": GOTO 5070
5080  GOSUB 5140
5090 N$ = " SMALL": PRINT : INPUT "LOWER CASE FONT <1-6>:":N:N =  INT (N):
     IF N < 1 OR N > 6 THEN  PRINT "REINPUT ": GOTO 5090
5100  GOSUB 5140
5110 N$ = " GREEK": PRINT : INPUT "GREEK FONT <1-3>:":N:N =  INT (N): IF N
     < 1 OR N > 3 THEN  PRINT "REINPUT ": GOTO 5110
5120  GOSUB 5140
5130  PRINT :N$(5) = "MATH SYMBOLS": PRINT N$(5)," ALSO BEING LOADED": GOTO
```

```
     5210
5140  IF N = 1 THEN N$(I) = "INDEX"
5150  IF N = 2 THEN N$(I) = "SIMPLEX"
5160  IF N = 3 THEN N$(I) = "COMPLEX"
5170  IF N = 4 THEN N$(I) = "CARTO"
5180  IF N = 5 THEN N$(I) = "SCRIPT"
5190  IF N = 6 THEN N$(I) = "GOTHIC"
5200 N$(I) = N$(I) + N$:I = I + 1: RETURN
5210  FOR I = 1 TO 5:J = J + 1:B$(J) = N$(I): NEXT I:J = J + 1
5220  PRINT : FLASH : PRINT "NOW LOADING FONTS": NORMAL
5230  FOR I = 1 TO 2: PRINT N$(I);"    ";: NEXT I: PRINT
5240  FOR I = 3 TO 4: PRINT N$(I);"    ";: NEXT I: PRINT : PRINT "MATH SYMB
     OLS"
5250 N = 0: FOR I = 1 TO 5
5260  PRINT D$;"OPEN ";N$(I);",D";DF
5270  PRINT D$;"READ ";N$(I)
5280  FOR JJ = 1 TO 32
5290  INPUT X$(N)
5300 N = N + 1
5310  NEXT JJ
5320  PRINT D$;"CLOSE ";N$(I)
5330  NEXT I
5340 MM =  FRE (0): HOME :N$ = ""
5350  RETURN
6000  REM  INPUT DRAWING
6010  PRINT BELL$;: INPUT "FILENAME OF DRAWING?";N$
6020  IF N$ = O$ THEN E = K - 28:R =  VAL (B$(E + 4)): GOTO 6120
6030  PRINT D$;"OPEN ";N$;",D";DD
6040  PRINT D$;"READ ";N$
6050  FOR K = 0 TO 502
6060  INPUT LB:B$(K) = ""
6070  FOR II = 1 TO LB: INPUT MID:B$(K) = B$(K) +  CHR$ (MID): NEXT II
6080  IF B$(K) = "END" THEN LX =  VAL (B$(K - 27)):LY =  VAL (B$(K - 26)):
     XD =  VAL (B$(K - 25)):YD =  VAL (B$(K - 24)):R =  VAL (B$(K - 23)):E
      = K - 27
6090  IF B$(K) = "END" THEN K = K - 22: FOR II = 0 TO 10:H(II) =  VAL (B$(
     K)):V(II) =  VAL (B$(K + 1)):K = K + 2: NEXT II:K = 502
6100  NEXT K
6110  PRINT D$;"CLOSE ";N$
6120  PRINT BELL$;: INPUT "CONT.(C) OR NEW PRINT (N)? ";Q$: IF  LEFT$ (Q$,
     1) = "N" THEN 6160
6130 SF = 0: FOR J = E TO 0 STEP  - 1: IF ((N$ <  > O$) AND (B$(J) = "F"))
      THEN  FOR I = 1 TO 5:N$(I) = B$(I + J): NEXT : GOSUB 5220:J = 0
6140  NEXT J:J = E: PRINT BELL$;"SHALL I MOVE PEN FROM 0,0 TO ";LX / 200;"
     ,";LY / 200;: INPUT A$: IF  LEFT$ (A$,1) = "Y" THEN PX = LX:PY = LY:P
     P = 0: GOSUB 7100
6150  GOTO 3010
6160 LX = 0:LY = 0: PRINT BELL$;"POSITION PEN IN LOWER LEFT CORNER": PRINT
     "STRIKE ANY KEY WHEN READY";: GET A$
6170  FOR K = 0 TO E - 1:J = K: GOSUB 3010
6180  NEXT K:SF = 0:J = E: GOTO 3010
6500  REM  SAVE DRAWING
6510  PRINT BELL$;: INPUT "FILENAME?";O$
6520  PRINT D$;"OPEN ";O$;",D";DD
6530  PRINT D$;"DELETE ";O$
6540  PRINT D$;"OPEN ";O$
6550  PRINT D$;"WRITE ";O$
6560  FOR K = 0 TO J:LL =  LEN (B$(K))
6570  PRINT LL
6580  FOR II = 1 TO LL: PRINT  ASC ( MID$ (B$(K),II,1)): NEXT II
```

```
6590  NEXT K
6600  PRINT D$;"CLOSE ";C$
6610  RETURN
7000  REM  *** OUTPUT ROUTINES ***
7010  REM  ** ENTER WITH X,Y,PP **
7020 PX = X * XX:PY = Y * XX
7030  IF PX -  INT (PX) > .5 THEN PX =  INT (PX) + 1
7040  IF PY -  INT (PY) > .5 THEN PY =  INT (PY) + 1
7050 PX =  INT (PX):PY =  INT (PY): IF TX OR TY THEN 7080
7060 LX = LX + PX:LY = LY + PY: IF LX < 0 OR LX > 2050 OR LY < 0 OR LY > 1
     450 THEN  PRINT : PRINT "PLOTTER LIMITS EXCEEDED...";BELL$;BELL$;BELL
     $:LX = LX - PX:LY = LY - PY:J = J - 1: RETURN
7070  IF CF AND LIMIT THEN X = 0:Y = 0:LX = LX - PX:LY = LY - PY: RETURN
7080  IF ((DOT) AND ( NOT (CF))) THEN  GOSUB 15000: RETURN
7090 XD = XD + PX:YD = YD + PY
7100 XH =  INT (PX / 256):XL = PX - XH * 256
7110 YH =  INT (PY / 256):YL = PY - YH * 256
7120  IF XH < 0 THEN XH = XH + 256
7130  IF YH < 0 THEN YH = YH + 256
7140  POKE VH,YH: POKE VL,YL: POKE HH,XH: POKE HL,XL: CALL VGEN
7150  IF CF AND  NOT (DOT) THEN 7190
7160  POKE CHAR,PP + 121: POKE TIME,255: CALL ALPHA: IF CF THEN  POKE TIME
     ,30: CALL OUT: GOTO 7190
7170  POKE TIME,32: IF PP = 0 THEN  POKE TIME,1
7180  CALL OUT
7190  RETURN
8000  REM  *** TEXT GENERATOR ***
8010  HOME
8020  PRINT "CHARACTER STRING: ";:LC = 0:SC = 0: INVERSE
8030  IF OS$ > "" THEN LL =  LEN (OS$) - 1:R$ = OS$: FOR IC = 1 TO LL: GOSUB
     8220: NEXT : PRINT : PRINT "SIZE ": RIGHT$ (R$,1): INPUT "OK ? ";A$: IF
      LEFT$ (A$,1) = "Y" THEN IW =  VAL ( RIGHT$ (R$,1)):OS$ = "":R$ =  MID$
     (R$,1,LL): GOTO 8130
8040  IF OS$ <  > "" AND  LEFT$ (A$,1) = "N" THEN  PRINT : PRINT "CHARACTE
     R STRING:";:OS$ = "":R$ = ""
8050  PRINT BELL$;: GET T$: IF T$ =  CHR$ (13) THEN LC = 0: NORMAL : GOTO
     8110
8060  IF T$ =  CHR$ (7) OR T$ =  CHR$ (19) THEN  FLASH :R$ = R$ + T$:SC =
     1: GOTO 8050
8070  IF T$ =  CHR$ (27) THEN LC =  NOT (LC): GOTO 8050
8080  IF  NOT (LC) AND  NOT (SC) THEN  INVERSE
8090  IF LC AND  NOT (SC) AND  ASC (T$) > 63 THEN  NORMAL :T$ =  CHR$ ( ASC
     (T$) + 128)
8100  PRINT T$;:R$ = R$ +  CHR$ ( ASC (T$)):SC = 0: GOTO 8050
8110  PRINT : PRINT BELL$: INPUT "SIZE (IN TENTHS) :";IW:IW =  INT (IW): IF
     IW < 1 OR IW > 5 THEN  PRINT BELL$;"RE-INPUT :";: GOTO 8110
8120  IF LF THEN W = 0: GOTO 8180
8130  PRINT BELL$: INPUT "HORIZ.(H) OR VERT.(V) CHARACTERS ?";L$: IF L$ <
      > "H" AND L$ <  > "V" THEN  PRINT BELL$;"REINPUT :";: GOTO 8130
8140 IV = 0: IF L$ = "V" THEN IV = 64
8150 B$(J) = B$ + R$ +  CHR$ (48 + IW) +  CHR$ (48 + IV):W = 0
8160  IF B$(TEMP) = "V" THEN  RETURN
8170  IF  NOT (SF) THEN WF = 1
8180  IF  LEN (R$) = 0 THEN  PRINT BELL$;"ERROR-REINPUT:";: GOTO 8030
8190  PRINT
8200  REM  TEXT STRING DECODER
8210  PRINT : PRINT : FOR IC = 1 TO  LEN (R$)
8220 P$ =  MID$ (R$,IC,1):P =  ASC (P$): IF P = 7 OR P = 19 THEN IC = IC +
     1:P$ =  MID$ (R$,IC,1)
8500  REM  *** MAKE HERSHEY VECTORS ***
```

```
8510  IF P$ = "" THEN  PRINT BELL$;"ERROR-REINPUT ";:R$ = "": GOTO 8030
8520 L =  ASC (P$) - 32
8530  IF (P = 7 OR P = 19) AND (L > 95) THEN L = L - 128
8540  IF P = 7 THEN L = L + 64
8550  IF P = 19 THEN L = L + 96
8560  IF L > 159 THEN L = L - 96
8570  IF OS$ > "" THEN 9020
8580  IF L > 159 OR L < 0 THEN  PRINT BELL$;"REINPUT ";:R$ = "": GOTO 8030

8590  IF (WF) OR LF THEN 8770
8600  GOSUB 9000
8610 PP = 0
8620  IF IV = 0 THEN XD = XD + (IW * ( ASC ( MID$ (X$(L),1,1)) - 93)): IF
     SF THEN LX = LX + (IW * ( ASC ( MID$ (X$(L),1,1)) - 93))
8630  IF IV = 6 THEN YD = YD + (IW * ( ASC ( MID$ (X$(L),1,1)) - 93)): IF
     SF THEN LY = LY + (IW * ( ASC ( MID$ (X$(L),1,1)) - 93))
8640  FOR G = 2 TO  LEN (X$(L)) STEP 2
8650 DX =  ASC ( MID$ (X$(L),G,1)) - 93
8660 DY =  ASC ( MID$ (X$(L),G + 1,1)) - 93
8670  IF DX = 34 AND  LEN (X$(L)) > 4 THEN PP =  NOT (PP)
8680  IF DX = 34 THEN G = G - 1: NEXT G
8690 DX = DX * IW:DY = DY * IW
8700  IF DX < 0 THEN DX = 256 + DX
8710  IF DY < 0 THEN DY = 256 + DY
8720  POKE XVEC,DX: POKE YVEC,DY: POKE PC,PP + 121: CALL LGEN
8730  NEXT G
8740  POKE ANGLE,IV: POKE TIME,24 + 2 ^ IW + 160 / 2 ^ IW
8750  CALL OUT: POKE SIZE,1: POKE ANGLE,0: POKE TIME,25
8760  NEXT IC: HOME : RETURN
8770 W = W +  ASC ( MID$ (X$(L),1,1)) - 93
8780  NEXT IC
8790  PRINT
8800 W = W * IW
8810  PRINT BELL$: PRINT "LENGTH OF STRING IS ";W / XX;: IF XX = 200 THEN
      PRINT " INCHES"
8820  IF XX = 78.74 THEN  PRINT " CENTIMETERS"
8830  IF LF THEN LF = 0:OS$ = R$ +  CHR$ (48 + IW): GOTO 8010
8840  PRINT BELL$: INPUT "IS THIS LENGTH O.K. (Y) OR (N):";Q$: IF  LEFT$ (
     Q$,1) <  > "Y" AND  LEFT$ (Q$,1) <  > "N" THEN 8840
8850  IF  LEFT$ (Q$,1) = "N" THEN 8900
8860  IF IV = 0 THEN LX = LX + W: IF LX > 2050 THEN LX = LX - W:LIMIT = 1
8870  IF IV = 96 THEN LY = LY + W: IF LY > 1450 THEN LY = LY - W:LIMIT = 1

8880  IF LIMIT THEN LIMIT = 0: PRINT BELL$;BELL$;BELL$;"PLOTTER LIMITS EXC
     EEDED...": GOTO 8900
8890 WF = 0: GOTO 8210
8900  PRINT : PRINT BELL$;: INPUT "REINPUT(R) OR ABORT(A)?";Q$:R$ = "": IF
      LEFT$ (Q$,1) = "R" THEN  PRINT BELL$: PRINT "REINPUT: ";: GOTO 8030
8910  IF  LEFT$ (Q$,1) <  > "A" THEN 8900
8920  GOTO 3040
9000  REM  TEXT GENERATOR DISPLAY
9010  VTAB (20)
9020  NORMAL
9030  IF P = 7 OR P = 19 THEN  FLASH
9040  IF L > 31 AND L < 63 THEN  INVERSE
9050  IF OS$ = "" THEN  HTAB (IC)
9060  PRINT P$;: NORMAL
9070  RETURN
10000  REM  XY ROUTINES
10010  IF  NOT (XYF) THEN X = 0:Y = 0
```

```
10020 XYF = 1: IF B$ = "X" AND RHO < > 0 THEN X = RHO:R$ = "":RHO = 0: RETURN

10030  IF B$ = "Y" AND RHO < > 0 THEN Y = RHO:R$ = "":RHO = 0: RETURN
10040  IF B$ = "X" AND RHO = 0 THEN I = I + 1:B$ =  MID$ (B$(J),I,1): GOSUB
     11000:X = RHO:RHO = 0:R$ = "": RETURN
10050  IF B$ = "Y" AND RHO = 0 THEN I = I + 1:B$ =  MID$ (B$(J),I,1): GOSUB
     11000:Y = RHO:RHO = 0:R$ = "": RETURN
11000  REM  CALCULATION OF RHO VALUE
11010  IF B$ > "," AND B$ < ":" THEN R$ = R$ + B$:RHO =  VAL (R$)
11020 I = I + 1:B$ =  MID$ (B$(J),I,1): IF B$ < "-" OR B$ > "9" OR I >  LEN
     (B$(J)) THEN I = I - 1:R$ = "": RETURN
11030  GOTO 11010
12000  REM  ERROR HANDLING ROUTINES
12010 GOOF =  PEEK (222)
12020  IF GOOF = 133 AND XYF THEN A =  ATN (Y / 1.E - 6):XYF = 0: GOTO 371
     0
12030  PRINT : PRINT BELL$;"ERROR #";GOOF;" ENCOUNTERED IN LINE "; PEEK (2
     18) + 256 *  PEEK (219): PRINT "ERROR HANDLER ACTIVE...":BELL$: FOR Z
      = 1 TO 200: NEXT
12040  IF GOOF = 53 THEN  PRINT : PRINT BELL$;"NEED FONTS TO CONTINUE";BEL
     L$: FOR ZZ = 1 TO 1000: NEXT ZZ:B$(J + 6) = B$(J): HOME :B$(J) = "F":
      GOSUB 5000: RESUME
12050  IF (GOOF = 5) OR (GOOF = 4) THEN DN =  PEEK (49624):DN =  NOT (DN -
     1) + 1: POKE 49624,DN: IF DD < > DN THEN DD = DN: GOTO 6030
12060  IF GOOF = 133 THEN  PRINT "DIVISION BY ZERO ERROR---NEED RADIUS TO
     DRAW CIRCLE": GOTO 3040
12070  IF GOOF = 9 THEN  PRINT BELL$;"DISK FULL,INSERT NEW DISKETTE";BELL$

12080  IF GOOF = 10 THEN  PRINT BELL$;"WARNING!!, ";N$;" IS WRITE PROTECTE
     D": PRINT "DO YOU WISH TO DESTROY OLD FILE"!: INPUT A$: IF  LEFT$ (A$
     ,1) = "N" THEN  GOTO 4030
12090  IF  LEFT$ (A$,1) = "Y" THEN  PRINT D$;"UNLOCK ";N$
12100  IF GOOF = 255 THEN  PRINT "BREAK IN LINE NO. "; PEEK (219) + 256 *
      PEEK (219): PRINT : PRINT "WARM RESTART AT 3000": STOP
12110  IF GOOF = 77 THEN MM =  FRE (0)
12120  RESUME
13000  REM  CIRCLE AND ELLIPSE DECODING
13010 ZZ = 1
13020 A(1) = 0:A(2) = 2 * PI
13030 AX(1) = RHO:AX(2) = RHO:RHO = 0
13040 I = I + 1:B$ =  MID$ (B$(J),I,1)
13050  IF I >  LEN (B$(J)) THEN  RETURN
13060  IF ((B$ < > ".") AND (B$ < "0" OR B$ > "9") AND (B$ < > "@") AND
     (B$ < > "^")) THEN  PRINT "SYNTAX ERROR--REINPUT..":CF = 0: GOTO 300
     0
13070  IF B$ = "@" THEN 13040
13080  IF I >  LEN (B$(J)) THEN  RETURN
13090  IF B$ = "C" THEN XX = 78.74: GOTO 13040
13100  IF B$ = "I" THEN XX = 200: GOTO 13040
13110  IF B$ < > "^" THEN 13160
13120  IF I =  LEN (B$(J)) THEN  RETURN
13130  IF RHO = 0 THEN  GOSUB 11000
13140 A(ZZ) = RHO * PI / 180:RHO = 0: IF A(1) > A(2) THEN A(2) = A(2) + 2 *
     PI
13150 ZZ = ZZ + 1: GOTO 13040
13160  GOSUB 11000
13170  IF AX(1) THEN AX(2) = RHO:RHO = 0: GOTO 13040
13180  GOTO 13030
15000  REM  DOTTED LINE OUTPUT
15010  IF DL = 0 THEN DL = 30
```

```
15020 TX = PX:TY = PY:DOT = 0
15030  IF ((TX = 0) AND (TY = 0)) THEN PP = 0:DL = 0: RETURN
15040  IF  ABS (TX) >  =  ABS (TY) THEN PX = DL *  SGN (PX):PY = DL *  SGN
     (PY) *  ABS (TY / TX)
15050  IF  ABS (TX) <  ABS (TY) THEN PY = DL *  SGN (PY):PX = DL *  SGN (P
     X) *  ABS (TX / TY)
15060  IF (( ABS (PX) >  ABS (TX)) OR ( ABS (PY) >  ABS (TY))) THEN PX = T
     X:PY = TY
15070 PP =  NOT (PP): GOSUB 7030:TX = TX - PX:TY = TY - PY: GOTO 15030
16000  HOME : PRINT : PRINT  TAB( 12);"EDITING ROUTINES"
16010  PRINT BELL$: INPUT "DUMP INSTRUCTION SET TO PRINTER?";A$: IF  LEFT$
     (A$,1) = "Y" THEN 16230
16020  PRINT BELL$: INPUT "EDIT ALL (A) OR SELECTED (S) INSTR.?";A$
16030  IF  LEFT$ (A$,1) = "S" THEN  GOSUB 16110: GOTO 3000
16040  IF  LEFT$ (A$,1) <  > "A" THEN 16020
16050  HOME :ZZ = 0
16060  PRINT "CURRENT INSTRUCTIONS ARE---"
16070  PRINT " NO.  INSTRUCTION---"
16080  FOR II = 1 TO 10: PRINT ZZ: TAB( 7);B$(ZZ): IF ZZ = J - 1 THEN  GOSUB
     16200: GOTO 3000
16090 ZZ = ZZ + 1: NEXT
16100  GOSUB 16200: GOTO 16070
16110  PRINT BELL$: INPUT "EDIT INSTRUCTION NO.?";Z
16120  PRINT "CURRENT INSTRUCTION IS:";B$(Z);BELL$
16130  PRINT BELL$: INPUT "CHANGE IT?";A$: IF  LEFT$ (A$,1) <  > "Y" THEN
     16160
16140  INPUT "DO YOU WISH TO ENTER A TEXT STRING?";A$: IF  LEFT$ (A$,1) =
     "Y" THEN OS$ = "":R$ = "":B$ = "W":TEMP = J:J = Z: GOSUB 3020:J = TEM
     P: GOTO 16160
16150  INPUT "REPLACE WITH:";B$(Z)
16160  INPUT "FINISHED?";A$
16170  IF  LEFT$ (A$,1) = "N" THEN 16110
16180  IF  LEFT$ (A$,1) = "Y" THEN  RETURN
16190  GOTO 16160
16200  INPUT "ARE THESE OK?";A$: IF  LEFT$ (A$,1) = "N" THEN 16110
16210  IF  LEFT$ (A$,1) <  > "Y" THEN 16200
16220  RETURN
16230  IF N$ = "" THEN  PRINT : INPUT "FILENAME OF DRAWING:";N$
16240  PR# 1: PRINT  CHR$ (9);"90N": PRINT  CHR$ (12)
16250  PRINT "FILENAME:";N$: PRINT : PRINT
16260  FOR ZZ = 0 TO J - 1: PRINT "INSTR. NO.";ZZ,B$(ZZ): NEXT ZZ
16270  PRINT  CHR$ (12): PR# 0: PRINT
16280  INPUT "REURN TO EDITOR(E) OR INTERPRETER(I)?";A$: IF  LEFT$ (A$,1) =
     "E" THEN 16020
16290  IF  LEFT$ (A$,1) = "I" THEN 3000
16300  GOTO 16280
20000  REM  ILLEGAL CHARACTER CHECKS
20010  FOR I = 1 TO  LEN (B$(J)):TC$ =  MID$ (B$(J),I,1)
20020  IF TC$ < "*" OR TC$ = "=" OR TC$ = "/" OR TC$ = "G" OR TC$ = "J" OR
     TC$ = "K" OR TC$ = "Z" OR TC$ = "B" OR TC$ = "N" OR TC$ = "M" THEN  PRINT
     BELL$;"ILLEGAL CHARACTER ...";I =  LEN (B$(J)): NEXT : GOTO 3040
20030  NEXT : RETURN
```

LISTING 3.

```
*****************************
*                           *
*        DRAFTSMAN          *
*                           *
*  --)TABLE OF VARIABLES(-- *
*                           *
*****************************
```

*C(*) A A$ A(*) AF ALPHA ANGLE AX(*) B$ B$(*) BELL$ CF CHAR D$

DA DD DF DL DN DOT DX DY E EF FF G GOOF H(*) HF HH HL I IC

II IV IW J JJ K L L$ LB LC LF LGEN LIMIT LL LX LY MID MM N

N$ N$(*) O$ OF OS$ OUT P P$ PC PI PP PX PY Q$ R R$ RHO SC

SF SIZE T$ TC$ TEMP TIME TX TY V(*) VGEN VH VL VV W WF X

X$(*) XD XH XL XVEC XX XYF Y YD YH YL YVEC Z ZZ

END OF VAR. LIST

```
*****************************
*                           *
*        DRAFTSMAN          *
*                           *
*  --)TABLE OF VARIABLES(-- *
*                           *
*****************************
```

*C(*) - FUNCTION = ASC(MID$(Q$,I,1))
3060 3340 3340

A - ANGLE IN DEGREES
3150 3170 3190 3190 3200 3210 3350 3550 3660 3660 3670 3670 3680
3680 3680 3690 3690 3690 12020

A$ - STRING VARIABLE USED MAINLY FOR INPUTTING ANSWERS AND FOR LOGO
40 90 90 130 3010 3260 3260 3340 3340 3350 6140 6140 6160 8030
8030 8040 12080 12080 12090 16010 16010 16020 16030 16040 16130
16130 16140 16140 16160 16170 16180 16200 16200 16210 16280 16280
16290

A(*) - ANGULAR LIMITS FOR ARCS A(1)=STARTING ANGLE A(2)=ENDING ANGLE
3610 3610 3620 3620 3620 3620 3630 3630 3630 3630 13020 13020
13140 13140 13140 13140 13140

AF - ARROW FLAG 1=SET
3180 3190 3660 3680 3690 3690

ALPHA - ONE CHARACTER OUTPUT ROUTINE IN BPLOT
1040 7160

ANGLE - ANGLE FOR BPLOT OUTPUT ROUTINE
1060 8740 8750

AX(*) - AXES FOR ELLIPSES AX(1)=MAJOR AXIS AX(2)=MINOR AXIS
3590 3590 3610 3610 3610 3620 3620 13030 13030 13170 13170

B$ - CHARACTER IN INPUT INSTRUCTION STRING
3080 3100 3110 3120 3120 3130 3140 3150 3160 3170 3180 3190 3200
3210 3220 3230 3240 3250 3260 3270 3280 3290 3290 3300 3310 3320
3330 3340 3350 3360 3370 3370 3390 3510 4030 4030 4040 4050 6610
8150 10020 10030 10040 10040 10050 10050 11010 11010 11010 11020
11020 11020 13040 13060 13060 13060 13060 13060 13070 13090 13100
13110 16140

B$(*) - INPUT INSTRUCTION STRING ARRAY 475 MAX.
1030 3020 3025 3040 3060 3080 3080 3090 3250 3260 3260 3280 3330
3330 3330 3330 3340 3340 3350 3530 4010 4010 4010 4010 4010 4020
4020 4020 5210 6020 6060 6070 6070 6080 6080 6080 6080 6080 6080
6090 6090 6090 6130 6130 6560 6580 8150 8160 10040 10050 11020
11020 12040 12040 12040 13040 13050 13080 13120 16080 16120 16150
16260 20010 20010 20020

BELL$ - CHR$(7) SOUNDS SPEAKER
30 90 130 130 150 160 540 1020 1100 2200 3040 3070 3070 3260
3260 3280 4030 4040 4040 4060 6010 6120 6140 6160 6510 7060 7060
7060 8050 8110 8110 8130 8130 8180 8510 8580 8810 8840 8880 8880
8880 8900 8900 12030 12030 12040 12040 12070 12070 12080 16010
16020 16110 16120 16130 20020

CF - CIRCLE FLAG 1=SET
3010 3140 3540 3540 3590 3600 3600 3610 3620 3630 3640 3650 3650
7070 7080 7150 7160 13060

CHAR - OUTPUT CHARACTER IN BPLOT
1060 7160

D$ - CHR$(4) DOS CONTROL
30 520 1010 5260 5270 5320 6030 6040 6110 6520 6530 6540 6550
6600 12090

DA - DELTA ANGLE FOR DRAWING CIRCLES AND ELLIPSES
3610 3620 3620 3630

DD - DISK DRIVE NUMBER 1 OR 2
1100 1100 1100 6030 6520 12050 12050

DF - CURRENT DISK DRIVE IN USE
1090 5260

DL - DOT LENGTH FOR DOTTED LINES
3130 15010 15010 15030 15040 15040 15050 15050

DN - DISK DRIVE NUMBER
12050 12050 12050 12050 12050 12050

DOT - DOTTED LINE TOKEN 1=SET

2100 3130 3610 3620 3640 3650 7090 7150 15020

DX - DELTA X
8650 8670 8680 8690 8690 8700 8700 8700 8720

DY - DELTA Y
8660 8690 8690 8710 8710 8710 8720

E - END OF FILE TOKEN
6020 6020 6080 6130 6140 6170 6180 12020

EF - ERASE FLAG 1=SET
3320 3560 3560

FF - FONT FLAG 1=SET
3300 3520 3520 3530 3530

G - LOOP INDEX FOR TEXT STRING DECODER
8640 8650 8660 8680 8690 8680 8730

GOOF - ERROR NUMBER PEEK(222)
12010 12020 12030 12040 12050 12050 12060 12070 12080 12100 12110

H(*) - HORIZONTAL HOME ARRAY
3540 3570 3600 4020 6090

HF - HOME FLAG 1=SET
3310 3570 3570 3580 3580 3600 3650

HH - HORIZONTAL HIGH BYTE
1070 7140

HL - HORIZONTAL LOW BYTE
1070 7140

I - GENERAL LOOP INDEX
60 60 60 60 90 90 90 510 520 3060 3060 3080 3080 3090 3250
3250 3250 3260 3260 3280 3340 3340 3340 3340 3340 3340 3350 3350
3350 3530 3530 3530 3590 3590 3590 3590 3600 5010 5010 5040 5140
5150 5160 5170 5180 5190 5200 5200 5200 5200 5210 5210 5210 5230
5230 5230 5240 5240 5240 5250 5260 5270 5320 5330 6130 6130 6130
10040 10040 10040 10050 10050 10050 11020 11020 11020 11020 11020
11020 13040 13040 13040 13050 13080 13120 20010 20010 20020

IC - LOOP INDEX FOR HERSHEY CHARATER DECODER
8030 8210 8220 8220 8220 8220 8760 8780 9050

II - LOOP INDEX
4020 4020 4020 4020 6070 6070 6090 6090 6090 6090 6580 6580 6580
16080

IV - CHARACTER DIRECTION INDICATOR 00=HOR. 06=VERT.
3330 8140 8140 8150 8620 8630 8740 8860 8870

IW - CHARACTER SIZE
3330 8030 8110 8110 8110 8110 8110 8150 8620 8620 8630 8630 8690
8690 8740 8740 8800 8830

J - LOOP INDEX MAINLY FOR INPUT INSTRUCTION DECODING
90 90 2100 3035 3035 3040 3040 3060 3070 3070 3080 3080 3090

3250 3260 3260 3280 3340 3340 3350 3520 3520 3540 3540 3710 3710
4010 4010 4010 4010 4010 4010 4010 4020 4020 4020 4020 4020 5210
5210 5210 5210 5210 6130 6130 6130 6130 6140 6140 6170 6190 6540
7060 7060 8150 10040 10050 11020 11020 12040 12040 12040 12040
13050 13080 13120 16090 16140 16140 16140 16210 20010 20010 20020

JJ - LOOP INDEX
5290 5310

K - LOOP INDEX MAINLY FOR DISK INPUT
3010 3020 3330 3330 3330 3330 3530 3530 3530 6020 6050 6060 6070
6070 6080 6080 6080 6080 6080 6080 6080 6080 6080 6080 6080 6080
6090 6090 6090 6100 6170 6170 6190 6540 6560 6590 6600

L - HERSHEY VECTOR INPUT INDEX
8520 8530 8530 8530 8540 8540 8550 8550 8560 8560 8560 8580 8580
8620 8620 8630 8630 8640 8650 8660 8670 8770 8040 8040

L$ - CHARACTER SIZE AND ORIENTATION STRING
8130 8130 8130 8140

LB - LENGTH OF FILE BUFFER
6060 6070

LC - LOWER CASE FLAG 1=SET
8020 8050 8070 8070 8080 8080

LF - LENGTH FLAG 1=SET
3160 8120 8590 8830 8830

LGEN - LETTER GENERATOR ADDRESS IN BPLOT
1040 8720

LIMIT - PLOTTER LIMIT CHECK FLAG 1=SET
3590 3600 7070 8860 8870 8880 8880

LL - LENGTH OF TEXT STRING
6560 6570 6590 8030 8030 8030

LX - X LOCATION FOR LIMIT CHECK
1020 3020 3030 4010 4040 4040 6080 6140 6140 6160 7060 7060 7060
7060 7060 7060 7070 7070 8620 8620 8860 8860 8860 8860 8860

LY - Y LOCATION FOR LIMIT CHECK
1020 3020 3030 4010 4040 4040 6080 6140 6140 6160 7060 7060 7060
7060 7060 7060 7070 7070 8630 8630 8870 8870 8870 8870 8870

MID - INPUT CHARACTER BUFFER FROM DISK
6070 6070

MM - CLEAR THE GARBAGE VARIABLE
3280 5340 12110

N - FONT NUMBER INPUT
5050 5050 5050 5050 5050 5070 5070 5070 5070 5070 5090 5090 5090
5090 5090 5110 5110 5110 5110 5110 5140 5150 5160 5170 5180 5190
5250 5290 5300 5300

N$ - FONT NAME / FILE NAME
5050 5070 5090 5110 5200 6010 6020 6030 6040 6110 6130 12080

```
13090 16230 16230 16250

N$(*) - FONT NAME ARRAY
3530 5130 5130 5140 5150 5160 5170 5190 5190 5200 5200 5210 5230
5240 5260 5270 5320 6130

O$ - OLD FILE NAME
6020 6130 6510 6520 6530 6540 6550 6600

OF - ORIGIN FLAG 1=SET
3230 3540 3540

OS$ - OLD TEXT STRING
8030 8030 8030 8030 8040 8040 8570 8830 9050 16140

OUT - OUTPUT ROUTINE FOR BPLOT
1040 3610 7160 7180 8750

P - ASC (P$)
8220 8220 8220 8530 8530 8540 8550 9030 9030

P$ - HERSHEY CHARACTER NUMBER AS STRING
8220 8220 8220 8510 8520 9060

PC - PEN CONTROL ADDRESS IN BPLOT
1050 8720

PI - 3.14159
2100 3190 3610 3660 3680 3680 3680 3690 3690 3690 13020 13140
13140

PP - PEN POSITION FLAG 0=UP 1=DOWN
3250 3270 3570 3610 3610 3620 3620 3680 3680 3690 3690 4040 6140
7160 7170 8610 8670 8670 8720 15030 15070 15070

PX - PLOTTER X DEFLECTION
3570 4040 6140 7020 7030 7030 7030 7030 7050 7050 7060 7060 7070
7090 7100 7100 15020 15040 15040 15050 15050 15060 15060 15070

PY - PLOTTER Y DEFLECTION
3570 4040 6140 7020 7040 7040 7040 7040 7050 7050 7060 7060 7070
7090 7110 7110 15020 15040 15040 15050 15050 15060 15060 15070

Q$ - STRING MAINLY FOR QUESTION ANSWER INPUT
160 160 170 530 1020 2200 2200 4040 4040 4040 4040 4060 6120
6120 8840 8840 8840 8850 8900 8900 8910

R - ORIGIN(HOME) NUMBER
2100 3540 3540 3540 3540 3570 3570 3570 3570 3570 3580 3600 3600
3600 3600 4010 6020 6080

R$ - RADIAL DEFLECTION STRING
3010 3330 8030 8030 8030 8030 8030 8040 8060 8060 8100 8100 8150
8180 8210 8220 8220 8510 8580 8830 8900 10020 10030 10040 10050
11010 11010 11010 11020 16140

RHO - VAL(R$)
3010 3120 3120 3120 3130 3130 3550 3670 3670 3680 3680 3680 3690
3690 3690 3720 10020 10020 10020 10030 10030 10030 10040 10040
10040 10050 10050 10050 11010 13030 13030 13030 13130 13140 13140
```

13170 13170

SC - SPECIAL CHARACTER FLAG 1=SET
8020 8060 8080 8090 8100

SF - SAVE FLAG 1=SET
2200 3010 3020 3520 3530 3710 3720 6130 6180 8170 8620 8630

SIZE - SIZE OF HERSHEY CHARACTER
1060 8750

T$ - TEXT INPUT STRING CHARACTER
8050 8050 8060 8060 8060 8070 8090 8090 8090 8100 8100

TC$ - TEMPORARY CHARACTER FOR SYNTAX CHECK
20010 20020 20020 20020 20020 20020 20020 20020 20020 20020 20020

TEMP - TEMPORARY VARIABLE
8160 16140 16140

TIME - OUTPUT DELAY TIME IN BPLOT
1060 1080 7160 7160 7170 7170 8740 8750

TX - TEMPORARY X
7050 15020 15030 15040 15040 15050 15050 15060 15060 15070 15070

TY - TEMPORARY Y
7050 15020 15030 15040 15040 15050 15050 15060 15060 15070 15070

V(*) - VERT. HOME ARRAY V(R)
3540 3570 3600 4020 6090

VGEN - VECTOR GENERATOR ADDRESS IN BPPLOT
1040 7140

VH - VERTICAL HIGH BYTE
1070 7140

VL - VERTICAL LOW BYTE
1070 7140

VV - LOOP INDEX
3020

W - WIDTH OF TEXT STRING
8120 8150 8770 8770 8800 8800 8810 8840 8860 8870 8870

WF - WORD FLAG 1=SET
8170 8590 8890

X - HORIZONTAL PLOTTER VARIABLE
3550 3550 3550 3560 3560 3590 3590 3600 3610 3620 3670 3680 3680
3690 7020 7070 10010 10020 10040

X$(*) - HERSHEY CHARACTER ARRAY
1030 5010 5290 8620 8620 8630 8630 8640 8650 8660 8670 8770

XD - X DEFLECTION IN PLOTTER UNITS
3540 3540 3570 3570 3600 4010 4040 4080 7090 7090 8620 8620

XH - X HIGH BYTE
7100 7100 7120 7120 7120 7140

XL - X LOW BYTE
7100 7140

XVEC - HORIZONTAL OUTPUT VECTOR
1050 8720

XX - PLOTTER CONVERSION FACTOR 200=1 INCH
1080 3130 3220 3240 7020 7020 8810 8810 8820 13090 13100

XYF - XYFLAG 1=SET
3550 3550 10010 10020 12020 12020

Y - VERTCAL PLOTTER DEFLECTION
3550 3550 3550 3560 3540 3590 3590 3600 3610 3620 3670 3680 3690
3690 7020 7070 10010 10030 10050 12020

YD - Y DEFLECTION IN PLOTTER UNITS
3540 3540 3570 3570 3600 4010 4040 6080 7090 7090 8630 8630

YH - VERTICAL HIGH BYTE
7110 7110 7130 7130 7130 7140

YL - VERTICAL LOW BYTE
7110 7140

YVEC - VERTICAL OUTPUT VECTOR
1050 8720

Z - INSTRUCTION NUMBER TO EDIT
12030 16110 16120 16140 16150

ZZ - LOOP INDEX
12040 12040 13010 13140 13150 13150 16050 16080 16080 16080 16090
16090 16260 16260 16260 16260

END OF VAR. LIST

LISTING 4.
FILENAME:SDAP

```
INSTR. NO.0      D
INSTR. NO.1      C
INSTR. NO.2      F
INSTR. NO.3      INDEX NUMBERS
INSTR. NO.4      INDEX CAPS
INSTR. NO.5      INDEX SMALL
INSTR. NO.6      INDEX GREEK
INSTR. NO.7      MATH SYMBOLS
INSTR. NO.8      PUXSYS
INSTR. NO.9      D
INSTR. NO.10     PU2U
INSTR. NO.11     @10.35
INSTR. NO.12     1R
INSTR. NO.13     PD3D
INSTR. NO.14     PU2L
INSTR. NO.15     PD3U
INSTR. NO.16     H
INSTR. NO.17     1D
INSTR. NO.18     @10.25^180^360
INSTR. NO.19     *@10.5 0^180
INSTR. NO.20     PU1.5U
INSTR. NO.21     .62L
INSTR. NO.22     WSDAP40
INSTR. NO.23     H
```

LISTING 5.

FILENAME:SOUP

```
INSTR. NO.0      O
INSTR. NO.1      O
INSTR. NO.2      F
INSTR. NO.3      INDEX NUMBERS
INSTR. NO.4      INDEX CAPS
INSTR. NO.5      INDEX SMALL
INSTR. NO.6      INDEX GREEK
INSTR. NO.7      MATH SYMBOLS
INSTR. NO.8      PUX7Y2
INSTR. NO.9      O
INSTR. NO.10     PU2U
INSTR. NO.11     @1@.95
INSTR. NO.12     1R
INSTR. NO.13     PD3D
INSTR. NO.14     PU2L
INSTR. NO.15     PD3U
INSTR. NO.16     H
INSTR. NO.17     1D
INSTR. NO.18     @1@.25^180^240
INSTR. NO.19     *@1@.25^0^180
INSTR. NO.20     PU1.5U
INSTR. NO.21     .42L
INSTR. NO.22     W80UP40
INSTR. NO.23     H
INSTR. NO.24     X1Y.5
INSTR. NO.25     PD8R
INSTR. NO.26     6IU
INSTR. NO.27     8L
INSTR. NO.28     6D
INSTR. NO.29     PU4R
INSTR. NO.30     PD6U
INSTR. NO.31     PUX-2Y-5.5
INSTR. NO.32     O
INSTR. NO.33     .34L
INSTR. NO.34     W(A)40
INSTR. NO.35     H
INSTR. NO.36     4R
INSTR. NO.37     .25L
INSTR. NO.38     W(B)40
INSTR. NO.39     H
```

LISTING 6.

```
                0010  ;          ROUTINE TO OUTPUT
                0020  ;          ONE CHAR. OR CHAR.
                0030  ;          STRING STORED IN
                0040  ;          TABLE AT $OUT($8600)
                0050  WAIT    EQU FCA8
                0055  ;          MONITOR DELAY ROUTINE
                0060  SERIO   EQU C200
                0065  ;          SERIAL CARD IN SLOT #2
                0070          OBJ 83B8
                0080          ORG 83B8
                0085  ;*******************************
                0087  ;
83B8  AE0984    0090  PLOT    LDX SIZE
                0095  ;          START:LOAD SIZE IN X REG
83BB  F025      0100          BEQ RESTOR
                0105  ;          IF ZERO RESTORE POINTERS
                0107  ;          AND RETURN
83BD  AD0086    0110  FETCH   LDA OUT
                0115  ;          GET NEXT CHARACTER
                0117  ;          TABLE STARTS AT $8600
83C0  C978      0120          CMP #$78
                0125  ;          IS IT "X"?
83C2  F01E      0130          BEQ RESTOR
                0135  ;          YES THEN RETURN
83C4  1016      0140          BPL PENCON
                0145  ;          IS IT "Y" OR "Z"?
                0146  ;          IF YES THEN PENCONTROL
83C6  6D0A84    0150          ADC ANGLE
                0155  ;          HOR. OR VERT. CHAR?
83C9  2977      0160          AND #$77
                0165  ;          ROTATE TO PROPER ORIEN.
83CB  20F583    0170          JSR PUTOUT
83CE  CA        0180          DEX
                0185  ;          FINISHED?
83CF  D0EC      0190          BNE FETCH
                0195  ;          NO. DO IT AGAIN
83D1  EEBE83    0200  MOVEUP INC FETCH+01
                0205  ;          GET NEXT CHARACTER
83D4  D0E2      0210          BNE PLOT
83D6  EEBF83    0220          INC FETCH+02
83D9  4CB883    0230          JMP PLOT
                0235  ; ******************************
83DC  20F583    0240  PENCON JSR PUTOUT
                0245  ;          PUT OUT PEN CONTROL
83DF  4CD183    0250          JMP MOVEUP
                0255  ;          GET NEXT CHARACTER
                0257  ; ******************************
83E2  AD0784    0260  RESTOR LDA HOOK+00
                0265  ;          RESET PTR. TO $8600
83E5  8DBE83    0270          STA FETCH+01
83E8  8D7985    0280          STA STORE+01
83EB  AD0884    0290          LDA HOOK+01
83EE  8DBF83    0300          STA FETCH+02
83F1  8D7A85    0310          STA STORE+02
83F4  60        0320          RTS
                0325  ;          RETURN TO CALLING PGM.
                0326  ; ******************************
```

```
                0327  ; ******************************
                0328  ;          PUTOUT CHAR ON  RS232
83F5  A8        0330  PUTOUT TAY
                0335  ;          SAVE ACCUMULATOR
83F6  2000C2    0340         JSR SERIO
                0345  ;          OUTPUT TO SLOT #2
83F9  AD0C84    0350         LDA DELAY
                0355  ;          LOAD DELAY (0-255)
83FC  20A8FC    0360         JSR WAIT
                0365  ;          MONITOR WAIT ($FCA8)
83FF  98        0370         TYA
                0375  ;          RESTORE ACCUMULATOR
8400  60        0380         RTS
                0385  ; ******************************
8401  AD0B84    0390  ONECHR LDA CHAR
                0395  ;          ONE CHAR.OUTPUT ROUTINE
8404  4CF583    0400         JMP PUTOUT
                0402  ;          DEFINE SOME VARIABLES
                0405  ; ******************************
8407  0086      0410  HOOK   EQU OUT
8409  01        0420  SIZE   DFD 01
840A  00        0430  ANGLE  DFD 00
840B  78        0440  CHAR   DFD 78
840C  FF        0450  DELAY  DFD FF
                0455  ; ******************************
                0460  ;          LETTER GENERATOR
                0470  ;          FOR HERSHEY VECTORS
                0480  PEN    EQU 78
                0485  ;          START WITH "X"
                0490  XVEC   EQU 00
                0500  YVEC   EQU 00
                0505  ;          START WITH X=Y=0
840D  A9FF      0510  LETTER LDA #$FF
840F  8DE385    0520         STA FH
                0525  ;          INITIALIZE F
8412  A978      0530         LDA #PEN
8414  207885    0540         JSR STORE
                0545  ;          STORE PEN CONT. CHAR.
8417  A900      0550  XIN    LDA #XVEC
                0555  ;          CALC. & STORE XL & XH
8419  8DD885    0560         STA XL
841C  3008      0570         BMI XNEG
841E  A900      0580         LDA #$00
8420  8DD985    0590         STA XH
8423  4C2B84    0600         JMP YIN
8426  A9FF      0610  XNEG   LDA #$FF
8428  8DD985    0620         STA XH
842B  A900      0630  YIN    LDA #YVEC
                0635  ;          CALC. & STORE YL & YH
842D  8DD685    0640         STA INPUT
8430  3008      0650         BMI YNEG
8432  A900      0660         LDA #$00
8434  8DD785    0670         STA YH
8437  4C3F84    0680         JMP GO
                0685  ;          JMP TO VGEN ROUTINE
843A  A9FF      0690  YNEG   LDA #$FF
843C  8DD785    0700         STA YH
                0705  ;          FALL INTO VGEN RTN.
                0706  ; ******************************
```

```
                0707  ; ******************************
                0710  ;          VECTOR GENERATOR SUBRTN
                0720  ;          CALL BOUT @$8440
                0730  ;          DBL.PREC.ON LOC. $85D6-
                0740  ;          $85D9 YL-YH-XL-XH
                0745  ;          A$ STRING $85EE-$85FD
843F  18        0750  GO      CLC
8440  A200      0760          LDX #$00
8442  E004      0770  GOLOOP CPX #$04
                0775  ;          GET X AND Y VALUES
8444  F030      0780          BEQ FEQ
8446  E8        0790          INX
8447  BDD685     0800          LDA INPUT,X
844A  300F      0810          BMI COMPL
844C  9DDA85     0820          STA INPUT+04,X
844F  CA        0830          DEX
8450  BDD685     0840          LDA INPUT,X
8453  9DDA85     0850          STA INPUT+04,X
8456  E8        0860          INX
8457  E8        0870          INX
8458  4C4284     0880          JMP GOLOOP
845B  CA        0890  COMPL   DEX
                0895  ;          CALC /X/ AND /Y/
845C  BDD685     0900          LDA INPUT,X
845F  49FF      0910          EOR #$FF
8461  6901      0920          ADC #$01
8463  9DDA85     0930          STA INPUT+04,X
8466  E8        0940          INX
8467  BDD685     0950          LDA INPUT,X
846A  49FF      0960          EOR #$FF
846C  6900      0970          ADC #$00
846E  9DDA85     0980          STA INPUT+04,X
8471  18        0990          CLC
8472  E8        1000          INX
8473  4C4284     1010          JMP GOLOOP
                1015  ;          HIPLOT BASIC RTN.
8476  A204      1020  FEQ     LDX #$04
8478  A006      1030          LDY #$06
847A  209985     1040          JSR ADD
847D  A208      1050          LDX #$08
847F  A00C      1060          LDY #$0C
8481  20C785     1070          JSR MOVE
8484  D009      1080          BNE DEQ
8486  CA        1090          DEX
8487  BDD685     1100          LDA INPUT,X
848A  D003      1110          BNE DEQ
848C  4C9385     1120          JMP QUIT
848F  A204      1130  DEQ     LDX #$04
8491  A006      1140          LDY #$06
8493  20B085     1150          JSR SUB
8496  A208      1160          LDX #$08
8498  A00E      1170          LDY #$0E
849A  20C785     1180          JSR MOVE
                1185
```

```
849D  A900     1190  IEQ0    LDA #$00
849F  8DE085   1200          STA INPUT+0A
84A2  ADD785   1210  YTEST   LDA INPUT+01
84A5  3005     1220          BMI TSUM
84A7  A902     1230  IEQ2    LDA #$02
84A9  8DE085   1240          STA INPUT+0A
84AC  A200     1250  TSUM    LDX #$00
84AE  A002     1260          LDY #$02
84B0  209985   1270          JSR ADD
84B3  3006     1280  TTEST   BMI TDIFF
84B5  EEE085   1290  IPLUS2  INC INPUT+0A
84B8  EEE085   1300          INC INPUT+0A
84BB  A200     1310  TDIFF   LDX #$00
84BD  A002     1320          LDY #$02
84BF  20B085   1330          JSR SUB
84C2  3006     1340  TESTT   BMI XTEST
84C4  EEE085   1350  TWOPI   INC INPUT+0A
84C7  EEE085   1360          INC INPUT+0A
84CA  ADD985   1370  XTEST   LDA INPUT+03
84CD  300E     1380          BMI IPT
84CF  ADE085   1390  ATEMI   LDA INPUT+0A
84D2  49FF     1400          EOR #$FF
84D4  6909     1410          ADC #$09
84D6  8DE085   1420          STA INPUT+0A
84D9  18       1430          CLC
84DA  4CE584   1440          JMP DTEST
84DD  ADE085   1450  IPT     LDA INPUT+0A
84E0  690A     1460          ADC #$0A
84E2  8DE085   1470          STA INPUT+0A
84E5  ADE585   1480  DTEST   LDA INPUT+0F
84E8  301E     1490          BMI TABSY
84EA  A206     1500  TABSX   LDX #$06
84EC  A010     1510          LDY #$10
84EE  20C785   1520          JSR MOVE
84F1  ADE485   1530  DMIND   LDA INPUT+0E
84F4  49FF     1540          EOR #$FF
84F6  6901     1550          ADC #$01
84F8  8DE485   1560          STA INPUT+0E
84FB  ADE585   1570          LDA INPUT+0F
84FE  49FF     1580          EOR #$FF
8500  6900     1590          ADC #$00
8502  8DE585   1600          STA INPUT+0F
8505  4C0F85   1610          JMP EEQ
8508  A204     1620  TABSY   LDX #$04
850A  A010     1630          LDY #$10
850C  20C785   1640          JSR MOVE
850F  A900     1650  EEQ     LDA #$00
8511  8DE885   1660          STA INPUT+12
8514  8DE985   1670          STA INPUT+13
               1675  ;
```

```
8517  A20E    1680  ZEQ    LDX #$0E
8519  A010    1690         LDY #$10
851B  209985  1700         JSR ADD
851E  A208    1710         LDX #$08
8520  A012    1720         LDY #$12
8522  209985  1730         JSR ADD
8525  A208    1740         LDX #$08
8527  A012    1750         LDY #$12
8529  209985  1760         JSR ADD
852C  3026    1770  ZTEST  BMI EPLUST
852E  A20E    1780  EPLUSD LDX #$0E
8530  A012    1790         LDY #$12
8532  209985  1800         JSR ADD
8535  A208    1810         LDX #$08
8537  A012    1820         LDY #$12
8539  20C785  1830         JSR MOVE
853C  A20C    1840  FMIN2  LDX #$0C
853E  A014    1850         LDY #$14
8540  20B085  1860         JSR SUB
8543  A208    1870         LDX #$08
8545  A00C    1880         LDY #$0C
8547  20C785  1890         JSR MOVE
854A  AEE085  1900  AII    LDX INPUT+0A
              1905  ;         GET "P","Q",ETC.
854D  CA      1910         DEX
854E  BDEE85  1920         LDA VECTOR,X
8551  4C7885  1930         JMP STORE
8554  A210    1940  EPLUST LDX #$10
8556  A012    1950         LDY #$12
8558  209985  1960         JSR ADD
855B  A208    1970         LDX #$08
855D  A012    1980         LDY #$12
855F  20C785  1990         JSR MOVE
8562  A20C    2000         LDX #$0C
8564  A016    2010         LDY #$16
8566  20B085  2020         JSR SUB
8569  A208    2030         LDX #$08
856B  A00C    2040         LDY #$0C
856D  20C785  2050         JSR MOVE
8570  AEE085  2060  AMI    LDX INPUT+0A
              2065  ;         GET "P","Q",ETC.
8573  CA      2070         DEX
8574  CA      2080         DEX
8575  BDEE85  2090         LDA VECTOR,X
8578  8D0086  2100  STORE  STA OUT
              2105  ;         PUT CHAR. IN TABLE
857B  C978    2110         CMP #$78
857D  F019    2120         BEQ RETURN
              2121  ;
```

```
                2125  ;          IF "X" THEN RETURN
857F  EE7985    2130          INC STORE+01
                2135  ;          INC. TABLE LOC.
8582  D003      2140          BNE TESTF
8584  EE7A85    2150          INC STORE+02
8587  ADE385    2160  TESTF   LDA INPUT+0D
858A  3007      2170          BMI QUIT
858C  D089      2180          BNE ZEQ
858E  ADE285    2190          LDA INPUT+0C
8591  D084      2200          BNE ZEQ
8593  A978      2210  QUIT    LDA #$78
8595  4C7885    2220          JMP STORE
8598  60        2230  RETURN  RTS
                2232  ; ******************************
                2235  ;          DOUBLE PREC. RTNS.
8599  18        2240  ADD     CLC
859A  BDD685    2250          LDA INPUT,X
859D  79D685    2260          ADC INPUT,Y
85A0  8DDE85    2270          STA INPUT+08
85A3  E8        2280          INX
85A4  C8        2290          INY
85A5  BDD685    2300          LDA INPUT,X
85A8  79D685    2310          ADC INPUT,Y
85AB  8DDF85    2320          STA INPUT+09
85AE  18        2330          CLC
85AF  60        2340          RTS
85B0  38        2350  SUB     SEC
85B1  BDD685    2360          LDA INPUT,X
85B4  F9D685    2370          SBC INPUT,Y
85B7  8DDE85    2380          STA INPUT+08
85BA  E8        2390          INX
85BB  C8        2400          INY
85BC  BDD685    2410          LDA INPUT,X
85BF  F9D685    2420          SBC INPUT,Y
85C2  8DDF85    2430          STA INPUT+09
85C5  18        2440          CLC
85C6  60        2450          RTS
85C7  BDD685    2460  MOVE    LDA INPUT,X
85CA  99D685    2470          STA INPUT,Y
85CD  E8        2480          INX
85CE  C8        2490          INY
85CF  BDD685    2500          LDA INPUT,X
85D2  99D685    2510          STA INPUT,Y
85D5  60        2520          RTS
                2521  ;
```

```
                2525  ; ******************************
                2527  ;          VARIABLE STORAGE
85D6  00        2530  INPUT  DFD 00
                2535  ;          INPUT = YL
85D7  00        2540  YH     DFD 00
85D8  00        2550  XL     DFD 00
85D9  00        2560  XH     DFD 00
85DA  00        2570  AYL    DFD 00
85DB  00        2580  AYH    DFD 00
85DC  00        2590  AXL    DFD 00
85DD  00        2600  AXH    DFD 00
85DE  00        2610  RESL   DFD 00
85DF  00        2620  RESH   DFD 00
85E0  00        2630  I      DFD 00
85E1  00        2640         DFD 00
85E2  00        2650  FL     DFD 00
85E3  00        2660  FH     DFD 00
85E4  00        2670  DL     DFD 00
85E5  00        2680  DH     DFD 00
85E6  00        2690  TL     DFD 00
85E7  00        2700  TH     DFD 00
85E8  00        2710  EL     DFD 00
85E9  00        2720  EH     DFD 00
85EA  02        2730  TWO    DFD 02
85EB  00        2740         DFD 00
85EC  01        2750  ONE    DFD 01
85ED  00        2760         DFD 00
85EE  70        2770  VECTOR DFD 70
                2775  ;          VECTOR = "P"
85EF  71        2780  Q      DFD 71
85F0  72        2790  R      DFD 72
85F1  71        2800  Q2     DFD 71
85F2  72        2810  R2     DFD 72
85F3  73        2820  S      DFD 73
85F4  74        2830  T      DFD 74
85F5  73        2840  S2     DFD 73
85F6  74        2850  T2     DFD 74
85F7  75        2860  U      DFD 75
85F8  76        2870  V      DFD 76
85F9  75        2880  U2     DFD 75
85FA  76        2890  V2     DFD 76
85FB  77        2900  W      DFD 77
85FC  70        2910  P2     DFD 70
85FD  77        2920  W2     DFD 77
85FE  00        2930         DFD 00
85FF  00        2940         DFD 00
8600  00        2950  OUT    DFD 00
                2955  ; ******************************
                2956  ;
```

LISTING 7.

Vector generator BASIC routine to generate the best straight line between two points. From Houston Instrument HiPlot Manual. Comments indicate the correspondance between this program and locations in the 6502 assembly language program BPLOT.

```
  2   INPUT X,Y ; REM Input YL, YH, XL, XH
  3   PRINT "z" ; REM Output PENCON if pen down;
  4   GOSUB 100 ; REM GO
  5   PRINT "y" ; REM Output PENCON if pen up;
100   REM ******* VECTOR GENERATOR SUBROUTINE*******; REM GO
110   REM THIS SUBROUTINE DRAWS THE BEST STRAIGHT LINE FOR A
120   REM COORDINATE CHANGE OF (X) AND (Y)
130   F=ABS(X)+ABS(Y) ; REM FEQ
140   IF F=0 THEN 470 ; REM JMP QUIT
150   D=ABS(Y)-ABS(X) ; REM DEQ
160   DIM A$(16) ; REM VECTOR
170   A$="pqrqrststuvuvwpw" ; REM VECTOR,Q,R,Q2,R2,S,T,S2,T2,U,V,
                                  U2,V2,W,P2,W2
180   I=0 ; REM IEQ0
190   IF Y<0 THEN 210 ; REM YTEST
200   I=2 ; REM ITEST
210   T=X+Y ; REM TSUM
220   IF T<0 THEN 240 ; REM TTEST
230   I=I+2 ; REM IPLUS2
240   T=Y-X ; REM TDIFF
250   IF T < 0 THEN 270 ; REM TESTT
260   I=I+2 ; REM TWOPI
270   IX X < 0 THEN 300 ; REM XTEST
280   I=8-I ; REM ATEMI
290   GOTO 310 ; REM JMP DTEST
300   I=I+10 ; REM IPT
310   IF D < 0 THEN 350 ; REM DTEST
320   T=ABS(X) ; REM TABSX
330   D=-D ; REM DMIND
340   GOTO 360 ; REM JMP EEQ
350   T=ABS(Y) ; REM TABSY
360   E=0 ; REM EEO
370   Z=T+D+E+E ; REM ZEQ
380   IF Z < 0 THEN 430 ; REM ZTEST
390   E=E+D ; REM EPLUS D
400   F=F-2 ; REM FMIN2
410   PRINT USING "#,1A";A$(I,I) ; REM AII
420   GOTO 460 ; REM JMP STORE (INSTEAD OF OUTPUTTING CHARACTER,
                 STORE IT IN OUT TABLE AT $8600+)
430   E=E+T ; REM EPLUST
440   F=F-1 ; REM LDX #$0C
450   PRINT USING "#,1A";A$((I-1),(I-1)) ; REM JMP STORE
460   IF F>0 THEN 370 ; REM TESTF
470   RETURN ; REM QUIT (STORE "x" TO MARK END OF TABLE,RETURN)
```

NBS-114A (REV. 2-80)

U.S. DEPT. OF COMM. BIBLIOGRAPHIC DATA SHEET (See instructions)	1. PUBLICATION OR REPORT NO. NBS TN 1184	2. Performing Organ. Report No.	3. Publication Date January 1984

4. TITLE AND SUBTITLE

Utility Programs for Producing Camera Ready Illustrations on a Microcomputer and a Laboratory Plotter

5. AUTHOR(S)

C. E. Dick

6. PERFORMING ORGANIZATION (If joint or other than NBS, see instructions)

NATIONAL BUREAU OF STANDARDS
DEPARTMENT OF COMMERCE
WASHINGTON, D.C. 20234

7. Contract/Grant No.

8. Type of Report & Period Covered

Final

9. SPONSORING ORGANIZATION NAME AND COMPLETE ADDRESS (Street, City, State, ZIP)

Same as in item 6 above.

10. SUPPLEMENTARY NOTES

☐ Document describes a computer program; SF-185, FIPS Software Summary, is attached.

11. ABSTRACT (A 200-word or less factual summary of most significant information. If document includes a significant bibliography or literature survey, mention it here)

A collection of software routines is described that allows the user to prepare camera ready illustrations in the laboratory or office environment. These routines are written in APPLESOFT BASIC and 6502 assembly code for the Apple II microcomputer which is interfaced with an inexpensive digital plotter. Provisions are made to draw figures composed of straight and curved line segments, letter the figures with a variety of graphic arts fonts, and save the figures on disk for later plotting or revision.

12. KEY WORDS (Six to twelve entries; alphabetical order; capitalize only proper names; and separate key words by semicolons)

Apple II computer; camera ready illustrations; digital plotter; graphic arts; microcomputer.

13. AVAILABILITY

☒ Unlimited

☐ For Official Distribution. Do Not Release to NTIS

☒ Order From Superintendent of Documents, U.S. Government Printing Office, Washington, D.C. 20402.

☐ Order From National Technical Information Service (NTIS), Springfield, VA. 22161

14. NO. OF PRINTED PAGES

59

15. Price

USCOMM-DC 6043-P80

NBS TECHNICAL PUBLICATIONS

PERIODICALS

JOURNAL OF RESEARCH—The Journal of Research of the National Bureau of Standards reports NBS research and development in those disciplines of the physical and engineering sciences in which the Bureau is active. These include physics, chemistry, engineering, mathematics, and computer sciences. Papers cover a broad range of subjects, with major emphasis on measurement methodology and the basic technology underlying standardization. Also included from time to time are survey articles on topics closely related to the Bureau's technical and scientific programs. As a special service to subscribers each issue contains complete citations to all recent Bureau publications in both NBS and non-NBS media. Issued six times a year. Annual subscription: domestic $18; foreign $22.50. Single copy, $5.50 domestic; $6.90 foreign.

NONPERIODICALS

Monographs—Major contributions to the technical literature on various subjects related to the Bureau's scientific and technical activities.

Handbooks—Recommended codes of engineering and industrial practice (including safety codes) developed in cooperation with interested industries, professional organizations, and regulatory bodies.

Special Publications—Include proceedings of conferences sponsored by NBS, NBS annual reports, and other special publications appropriate to this grouping such as wall charts, pocket cards, and bibliographies.

Applied Mathematics Series—Mathematical tables, manuals, and studies of special interest to physicists, engineers, chemists, biologists, mathematicians, computer programmers, and others engaged in scientific and technical work.

National Standard Reference Data Series—Provides quantitative data on the physical and chemical properties of materials, compiled from the world's literature and critically evaluated. Developed under a worldwide program coordinated by NBS under the authority of the National Standard Data Act (Public Law 90-396).

NOTE: The principal publication outlet for the foregoing data is the Journal of Physical and Chemical Reference Data (JPCRD) published quarterly for NBS by the American Chemical Society (ACS) and the American Institute of Physics (AIP). Subscriptions, reprints, and supplements available from ACS, 1155 Sixteenth St., NW, Washington, DC 20056.

Building Science Series—Disseminates technical information developed at the Bureau on building materials, components, systems, and whole structures. The series presents research results, test methods, and performance criteria related to the structural and environmental functions and the durability and safety characteristics of building elements and systems.

Technical Notes—Studies or reports which are complete in themselves but restrictive in their treatment of a subject. Analogous to monographs but not so comprehensive in scope or definitive in treatment of the subject area. Often serve as a vehicle for final reports of work performed at NBS under the sponsorship of other government agencies.

Voluntary Product Standards—Developed under procedures published by the Department of Commerce in Part 10, Title 15, of the Code of Federal Regulations. The standards establish nationally recognized requirements for products, and provide all concerned interests with a basis for common understanding of the characteristics of the products. NBS administers this program as a supplement to the activities of the private sector standardizing organizations.

Consumer Information Series—Practical information, based on NBS research and experience, covering areas of interest to the consumer. Easily understandable language and illustrations provide useful background knowledge for shopping in today's technological marketplace.

Order the **above** *NBS publications from: Superintendent of Documents, Government Printing Office, Washington, DC 20402.*

Order the **following** *NBS publications—FIPS and NBSIR's—from the National Technical Information Service, Springfield, VA 22161.*

Federal Information Processing Standards Publications (FIPS PUB)—Publications in this series collectively constitute the Federal Information Processing Standards Register. The Register serves as the official source of information in the Federal Government regarding standards issued by NBS pursuant to the Federal Property and Administrative Services Act of 1949 as amended, Public Law 89-306 (79 Stat. 1127), and as implemented by Executive Order 11717 (38 FR 12315, dated May 11, 1973) and Part 6 of Title 15 CFR (Code of Federal Regulations).

NBS Interagency Reports (NBSIR)—A special series of interim or final reports on work performed by NBS for outside sponsors (both government and non-government). In general, initial distribution is handled by the sponsor; public distribution is by the National Technical Information Service, Springfield, VA 22161, in paper copy or microfiche form.

U.S. Department of Commerce
National Bureau of Standards

Washington, D.C. 20234
Official Business
Penalty for Private Use $300

U.S.MAIL

POSTAGE AND FEES PAID
U.S DEPARTMENT OF COMMERCE
COM-215

SPECIAL FOURTH-CLASS RATE
BOOK